Spare Parts Catalogue Systems
Scienta Omicron GmbH

German Headquarters:
Scienta Omicron GmbH
Limburger Str. 75
65232 Taunusstein, Germany
Tel.: +49(0) 61 28 / 987-0
E-Mail: services@scientaomicron.com

scientaomicron

Preface

This document is intended to provide at a glance information on the most commonly used spare parts and consumables for Scienta Omicron UHV Systems and their frequently used components. The catalogue does not offer a complete list of everything that is available. The customer is encouraged to contact Scienta Omicron Services whenever looking for an item not listed in the catalogue.

The catalogue does not include any information on spares and consumables for SPM and Electron Spectroscopy equipment. Please contact Scienta Omicron Services for any inquiry about SPM or Electron Spectroscopy equipment.

Consumables vs spares

Scienta Omicron distinguishes between consumables and spare parts. Consumables are all parts that are subject to usual wear and need to be replaced after a certain operation time, even if no fault occurred and they were well-treated. They are discarded after replacement and not repaired and are not subject to warranty. ***Consumables*** are marked throughout this document in color and italic, e.g. ***PN04404-S***. Typical consumables include filaments, gaskets, and crucibles.

Repairs and estimates

Whenever an item needs to be sent back for repair, Scienta Omicron will either charge a flat repair fee or provide an estimate. The estimate is a fixed price that covers handling and inspection of the device. Once the actual repair costs are defined, and if they exceed the estimate price, the actual costs are quoted to the customer as repair costs. The estimate price will be credited to these costs. The customer needs to order the repair separately or decide to abort the repair. Only after the second order, the repair will proceed.

Returns

Any return, whether for repair or exchange, needs to be announced to Scienta Omicron by placing an order. Together with an order confirmation for an estimate or for a return, a set of return papers will be issued with further instructions. The defective item has to be sent back as soon as possible but at least within 4 months. Please note that Scienta Omicron will not accept any returned items without a proper set of return papers. These papers include a decontamination sheet through which the customer verifies that the item is free from harmful substances. For any item meant to be used in a UHV system, it is mandatory to send a decontamination sheet, filled out and signed, together with the item. Scienta Omicron reserves the right to refuse the handling of any item that comes without correct decontamination sheet or that is contaminated by harmful substances.

Disclaimer

This document has been compiled with great care and is believed to be correct at the date of print. The information in this document is subject to change without notice and does not represent a commitment on the part of Scienta Omicron GmbH.

Contents

Preface **1**

Lighting and Cameras **5**
Chamber light 5
Cameras and monitors 5

Sample transfer **7**
Wobble sticks 7
Wobble sticks with bellows 7
Magnetically coupled wobble sticks 8
Linear transfer 11
Sample loading and storage 12
Wafer transfer 15
Sample plates and wafer holder for 2" MBE Systems 15
Sample plates for 3" MBE Systems 18
Wafer holder for 4" MBE Systems 18

UHV parts **21**
CF parts 21
Valves 24
Gate valves 24
Right angle valves 26
Gas inlet valves 27

Pressure measurement **28**
Ion gauge 28
Pirani gauge 29

Pumps **30**
Ion Getter Pumps 30
Titanium Sublimation Pumps 30
Scroll pumps 31

Bake-out **32**

System accessories **35**

Manipulator Sample Stages **36**
Resistive tungsten wire sample heater 36
Resistive PBN sample heater 37
PN01719-S Resistive PBN sample heater facility for primary rotation (RH 1 C) 37
PN01721-S Resistive PBN sample heater facility for secondary rotation (RH 2 C) 40
E-beam sample heater 42
PN01720-S Old-type E-beam sample heater (1370 K) 42
R220695-S High temperature e-beam sample heater facility (1670 K) 44
High temperature sample heaters 47
R212425 Old-type high temperature heater stage (1670 K) 47
R220695-S High temperature heater stage (1670 K) 48
High temperature sample heater (2500 K) 49
Manipulator electrical connections 50
In-vacuum wiring 50
Ceramics for manipulator wiring 50
Standard feedthroughs and cables 51

Power supplies for manipulator heaters 56
Liquid nitrogen cooling 56

Evaporators 57
EFM Evaporators 57
Standard crucibles 57
Barrel connectors for crucibles 59
Spare ceramics for EFM 59
Water cooling spare parts for EFM 60
Filaments for EFM 60
Effusion Cells 60
Overview 60
Spare parts and crucibles 61
MBE Accessories 64
Shutter Module for effusion cell 64
BFM – Beam Flux Monitor 64
QMB – Film Thickness Monitor 65
Cooling water distributor 65

Ion sources 67
IS 40 Ion Source 67
FDG 15 and FDG 150 67
GCIB 68
Ion Sputter Gun IG70 68
Canion Focused Ion Beam 69
ISE 5 (discontinued) 69
ISE 10 and ISE 100 (discontinued) 69
FIG05 (discontinued) 69

Electron sources and Scanning Electron Microscopes 70
UHV Gemini 70
UHV Gemini: old electronics and software 70
New electronics and software for UHV Gemini 70
Vortex 71
Vortex UHV SEM column 71
Channeltron-SED for LT Nanoprobe with Vortex column 71
Standard SEM calibration samples 71
Sample Neutralization 73
FS40A1 Flood Source 73
CN10 Charge Neutralizer 73

UV/Vis Sources 74
Hg UV Source 74
HIS13/HIS14 VUV Source 74

X-Ray sources 77
XR6 - X-ray source for NanoESCA 77

Electron diffraction 78
SpectaLEED - LEED/AES, MCPLEED, SPALEED 78
New LEED series: IntegraLEED 79
LEED and AES power supplies 81
LEED software/camera packages 82

Analysers and Detectors **84**
HiPP 84
PEEM 84
PEEM sample plates 84
SPLEED for SEMPA 85
Test Samples 86
For PES 86
For XPS 86

Upgrade Packages **87**
Mistral Upgrade Package 87
Upgrade Packages for Scienta Omicron Manipulator Heaters 88
PBN Sample Heater Upgrade Package 88
E-Beam Heater Upgrade Packge, High Temperature Version 89
High Temperature Heater Stage Upgrade Package 90
Upgrade Packages for Scienta Omicron SpectaLEED 91
LEED Spot Analysis Upgrade for Scienta Omicron SpectaLEED Optics 91
High Sensitivity Auger Upgrade for Scienta Omicron SpectaLEED Optics 92
UHV GEMINI Electronics and Software Upgrade Package 93

Lighting and Cameras

Chamber light

PN05555-S LED Chamber light clip

Power Supply Voltage	12 V DC
Beam Angle	60°
Power Consumption	1.5 W
Color Temperature	5700 K
Cable Connection	Power Jack 5.5 x 2.1
Max Ambient Temperature	45 °C
Lifetime	50,000 h

Vacuum chamber LED light is an advanced light source designed to illuminate UHV systems and can be clamped onto flange nuts or bolts. The clip is compatible with M8 and M6 nuts and is stable in any orientation on UHV-viewports. Due to LED technology, it is efficient and has a very long lifetime.

PN04467-S Module power supply
Power supply package for LED chamber lights, cameras and monitors.

The module contains:

- power cable
- 12 V power supply
- Low voltage junction for 6 V DC plugs.

Cameras and monitors

PN06819-S Chamber scope camera
Standard color camera for observation of tip approach and sample handling. The analog CMOS camera provides a wide dynamic range and has 1080 P full HD resolution via BNC cable. To be used together with ***PN04469-S Module camera accessories***, ***PN04467-S Module power supply,*** and ***PN04471-S Module monitor***

PN04469-S Module camera accessories
Accessories for video camera PN06819-S.

The module contains:

- Zoom lens and 2x extender
- Ball joint for flexible mount
- Mounting bracket for UHV chamber
- Power cable 2 m (fits to PN04467-S power supply module)

PN04471-S Module monitor

Small bench-top monitor for camera-assisted transfer or tip approach.

Monitor technical data	
Display	8’’ TFT LCD color
Resolution	1024 x 768
Input options	HDMI/ CVBS/ BNC/ AV/ VGA

The module contains:

- Video monitor with stand
- Power cable 3 m (fits to PN04467-S power supply module)
- BNC video cable 3 m (fits to PN06819-S video camera)

Sample transfer

Wobble sticks

Wobble sticks with bellows

Wobble sticks with bellows are available with standard Scienta Omicron in-line and orthogonal pincer grips. Providing linear travel and angular movement, the wobble stick can be used to move and transfer samples as well as STM tips in vacuum. In extended position, the outer vacuum length is 107 mm. Please note: The bellows type wobble sticks presented here always include a pincer fitted to the wobble stick body. A replacement inline jaw assembly is presented in this section. Replacing a 90° jaw assembly requires a factory repair.

Wobble sticks with orthogonal pincer grip

These are wobble sticks equipped with a fixed 90° pincer grip. The distances are measured from the sealing side of the mounting flange in the fully retracted position ("pull").

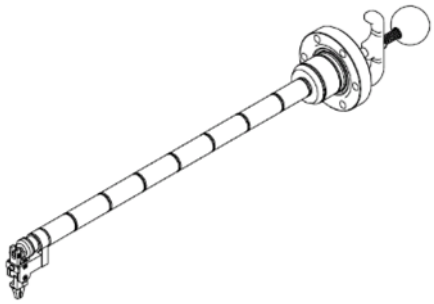

	E2291-S	***E2287-S***	***E2288-S***
	WS 120	WS 180	WS 270
In vacuum	134 mm	177 mm	229 mm
Ex vacuum	227 mm	287 mm	377 mm
Total length	361 mm	464 mm	606 mm
Travel	120 mm	180 mm	270 mm

Wobble sticks with in-line pincer grip

These are wobble sticks equipped with a removable straight pincer grip. The distances measure from the sealing side of the mounting flange in the fully retracted position ("pull").

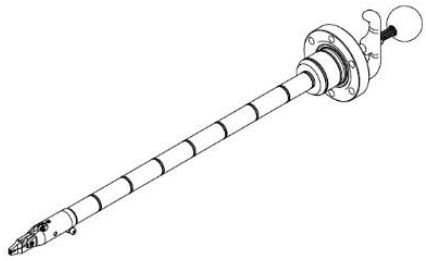

	E2296-S	***E2295-S***	***E2297-S***
	WS 120 IL	WS 180 IL	WS 270 IL
In vacuum	182 mm	225 mm	277 mm
Ex vacuum	227 mm	287 mm	377 mm
Total length	409 mm	512 mm	654 mm
Travel	120 mm	180 mm	270 mm

E2182-S ***Inline jaw assembly***
In-line pincer grip for WS 120/ 180/ 270 IL bodies.

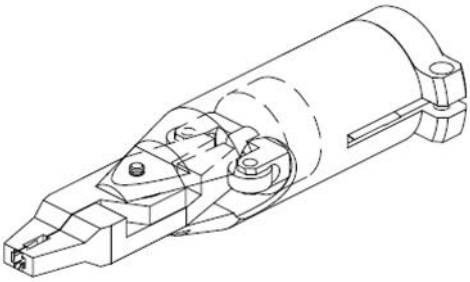

Wobble stick support bar (for bellows type WS)
This support bar prevents the wobble stick from being pulled into the system and provides fixing in a neutral position.

Length	Part number	Commonly used with
120 mm	***S103903-S***	Orthogonal WS 180
155 mm	***R200572-S***	Inline wobble sticks
190 mm	***R209499-S***	Orthogonal WS 270

Magnetically coupled wobble sticks

Replacing bellows type wobblesticks in SPM Systems
As an alternative to wobble sticks with bellows, magnetically coupled wobble sticks are available with standard Scienta Omicron pincer grips. They are less likely to develop vacuum leaks but have a fixed shaft that always protrudes from the UHV system. When replacing a wobble stick with bellows, please consider requirements for minimal retraction length, travel range and maximum angle as well as bake-out tent restraints. Please contact Scienta Omicron Services to assist you in identification of the best replacement option.

Please note that magnetically coupled wobble sticks presented here do not include a pincer but only the wobble stick body. A pincer, if required, needs to be ordered separately. Suitable pincers are described in this section also.

For standard LT STM systems, the following wobble sticks are recommended:

Adapter flange type	Transfer positions	Wobble stick with bellows	Magnetically coupled wobble stick
AF 180 (R204166) LT Gen. II	STM and room temperature storage carousel only	WS 180 IL *E2295-S*	*PN05025-S* *(Other options on request.)*
AF 270 (R204169) LT Gen. II	Tip Preparation Tool, LN_2 cooled storage carousel, heater stage, sample cleaving	WS 270 IL *E2297-S*	*On request.*
AF 180 (R223409-S) LT Gen. III	STM and room temperature storage carousel only	WS 180 IL *E2295-S*	*PN07608-S* *(or R217920)*
AF 180 (R223409-S) LT Gen. III	Tip Preparation Tool, cooled storage carousel, heater stage, sample cleaving	n/a	*PN07608-S* *(or R220070)*
AF 180 (R223409-S) LT Gen. III	All options	n/a	*PN07608-S (available with R222945-S In-line jaw)*

Please note:
All magnetically coupled wobble sticks listed here come without jaw assembly. The jaw needs to be ordered separately. An adapter is included, if required.
When switching to a magnetically coupled wobble stick, modification of bake-out tent might be required.
All wobble sticks except PN07608 come without support bar.

(Standard) magnetically coupled wobble sticks
Providing linear travel and angular as well as rotational movement, the wobble stick can be used to move and transfer samples as well as STM tips in vacuum. These are wobble sticks without jaw assembly. The distances are measured from the sealing side of the mounting flange in the fully retracted position ("pull"). Mounting flange DN40CF. A support bar is included. Different lengths on request.

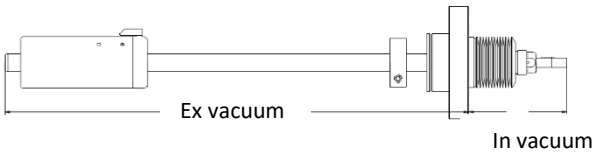

	R218627-S	***R218486-S***	***R218527-S***
	WS 100	WS 150	WS 200
In vacuum	61 mm	61 mm	61 mm
Ex vacuum	238 mm	288 mm	338 mm
Total length	299 mm	349 mm	399 mm
Travel	100 mm	150 mm	200 mm
Rotation	360°	360°	360°

R222945-S ***In-line jaw assembly for standard magnetically coupled WS***

Total length 75 mm.

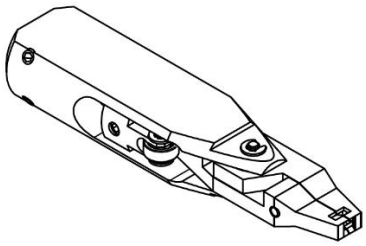

R218440-S ***Transfer head assembly, bayonet type, for standard magnetically coupled WS***

Total length 41 mm.

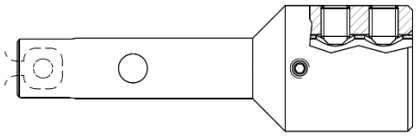

Support bar for magnetically coupled wobble sticks

This support bar is suitable for certain magnetically coupled dual shaft wobble sticks. The length of the support depends on the model of your wobble stick. When ordering please indicate the amount of linear travel of your wobble stick.

PN01035-S	*PN01993-S*
Straddled flange/ 3 rods (Standard)	Inline flange/ 4 rods
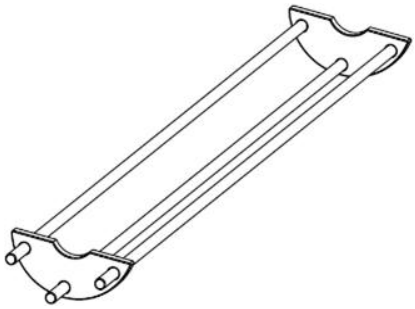	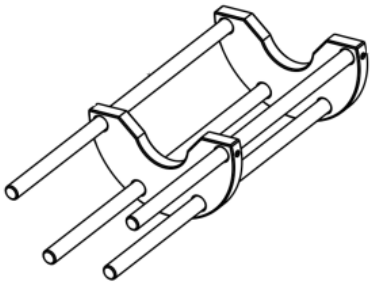

Linear transfer

High power magnetic probes for linear and rotary transfer

Magnetically coupled transfer device for rotation and translation in UHV applications. The magnet is bakeable up to 250 °C. Please note that a replacement bearing cage set is no longer available as a spare part. A factory repair is required to fit the bearing to any specific transfer device.

Specifications:

- 360° continuous rotation
- Torque 1 Nm
- Axial Thrust 50 N
- Maximum bakeout temperature (including external magnet): 250 °C
- Standard linear position lock

Part number	Description	Flange size	Travel range	External length
F2039-S	Magnetic probe 12"	DN40CF	305 mm	514 mm
F2094-S	Magnetic probe 18"	DN40CF	460 mm	692 mm
F2095-S	Magnetic probe 24"	DN40CF	610 mm	870 mm
F2096-S	Magnetic probe 36"	DN40CF	914 mm	1225 mm
CA06423-S	Magnetic probe 36"	DN63CF	914 mm	1225 mm

Other lengths are available on request.

Models with a DN40CF flange have a shaft diameter of 19.0 mm.
Models with a DN63CF flange have a shaft diameter of 25.4 mm.

PN01887-S Transfer head (standard)

Transfer head with open/close mechanism for standard Scienta Omicron sample plates, to be mounted on a 19.1 mm shaft.

S1106-S ***Hard metal rod for transfer head***
Spare metal rod for transfer head ***PN01887-S***.

Sample loading and storage

B001327-S ***Sample loading stage for FEL***
To be mounted on a 19.1 mm shaft.

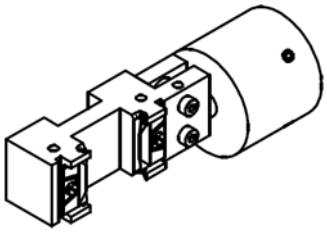

R210972-S ***Triple sample loading stage for FEL***
To be mounted on a 19.1 mm shaft.

Lengths measured from shaft:

- Middle position #1: 28 mm
- Middle position #2: 59 mm
- Middle position #3: 90 mm
- End of stage: 106.5 mm

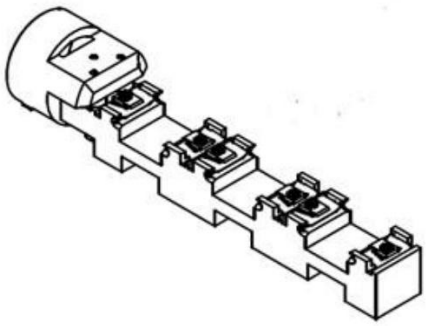

R220647-S ***Triple sample storage assembly***

To be mounted to an M6 thread at the end of a shaft (e.g. from magnetic probe).

Lengths measured from shaft:

- Middle position #1: 35 mm
- Middle position #2: 56.5 mm
- Middle position #3: 78 mm
- End of stage: 90 mm

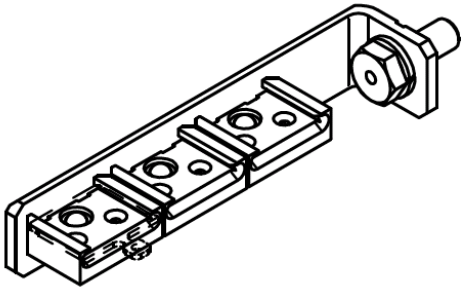

R208100-S ***Sample acceptor assembly, perpendicular***

To be mounted on a 19.1 mm shaft.

Provides space for three samples. This unit can be extended with additional modules ***CA00946-S***. Also available with shaft connector on opposite side (***R207688-S***).

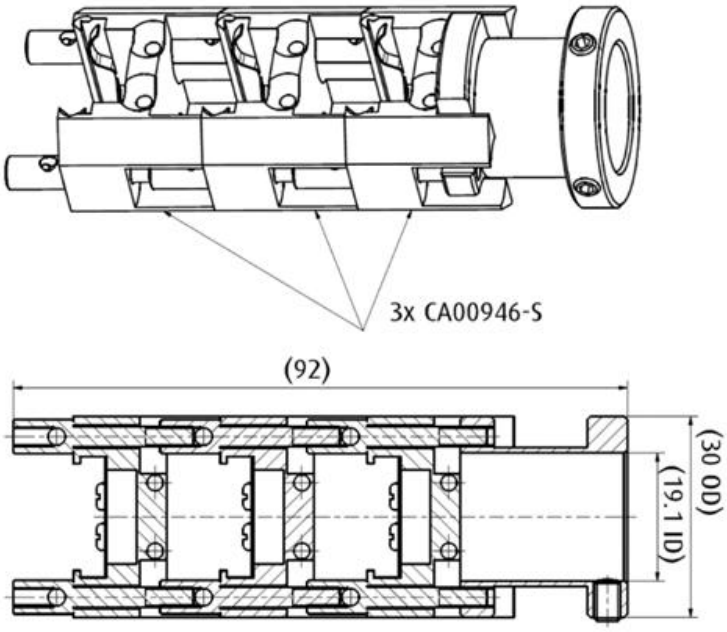

CA00946-S Additional sample module for sample acceptor assembly

Can be used to extend the linear storage facility R208100-S or R207688-S. Extends total length by 22 mm.

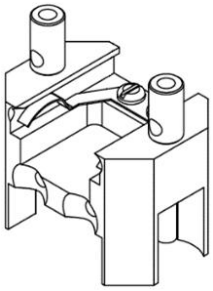

R220104-S Triple sample storage assembly, perpendicular

To be mounted to an M6 thread at the end of a shaft (e.g. from magnetic probe). The total length of this assembly is 58.1 mm, taken from shaft. The sample orientation is perpendicular to transfer direction. This sample storage is available with up to 6 sample positions. The storage assembly is available with a bayonet socket assembly for transfer also. Please contact Scienta Omicron for additional information.

Due to the less complex construction compared with R208100-S, this storage is less subject to wear and promises to run smoothly over longer times of operation.

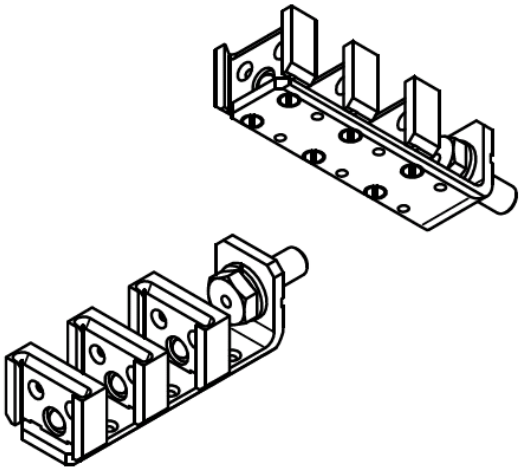

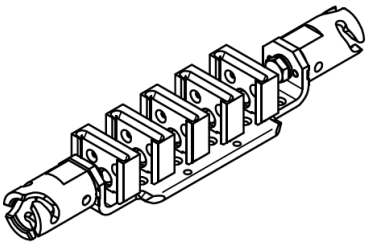

Example picture for the bayonet socket type assembly.

R217581-S Sample storage assembly with 12 positions, perpendicular

This assembly is a double-sided variant of R220104. Also to be mounted to an M6 thread at the end of a shaft. Total length is 106 mm taken from shaft. Please note that transfer requires a tube > DN40.

This assembly is also available in sample orientations different from what is presented here. Further, the assembly is available as storage for SPM tip-transfer plates (for Infinity, Polar and Stream) and as a

combination for storage of sample and transfer plates. Please contact Scienta Omicron Service for additional information.

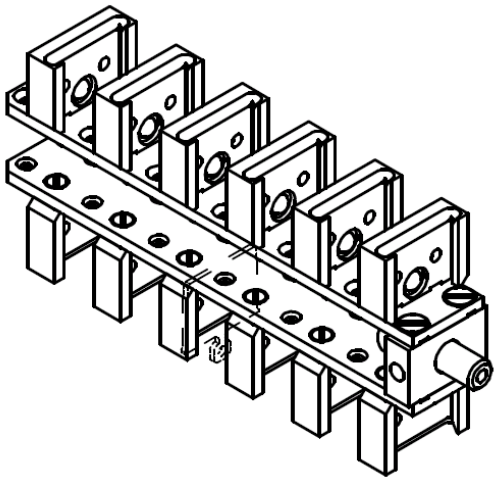

R1691-S ***Load lock loading tool***

This tool is used to transfer samples onto the transfer head in the fast entry lock.

Wafer transfer

Sample plates and wafer holder for 2” MBE Systems

This section shows sample plates and wafer holder made of Molybdenum. Other materials are available on request. Further all articles shown here are available with size of 3” also. Please contact Scienta Omicron Service for further information.

R205135-S ***Sample plate 2” (molybdenum, 1 mm)***

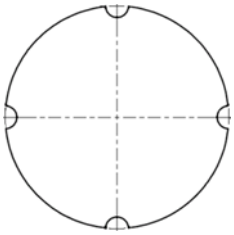

Outer diameter: 62 mm. Total thickness: 1 mm. Material: molybdenum.

R205825-S ***Sample plate 2" (molybdenum, 2 mm)***

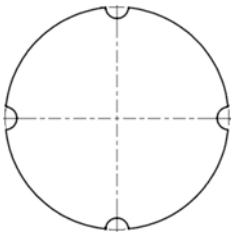

Outer diameter: 62 mm. Total thickness: 2 mm. Material: molybdenum.

R209620-S ***Sample plate 2" with window and threads (molybdenum)***

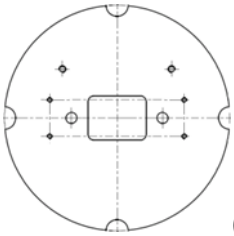

(No rim for wafer seating)

Outer diameter: 62 mm. Window size: 16 x 12 mm^2 (rounded corners). Total thickness: 2 mm. Material: molybdenum. Equipped with 2x M2 and 4x M1.4 threads, as well as 2x 3 mm through holes.

R213485-S ***Sample plate 2" with window and threads (molybdenum)***

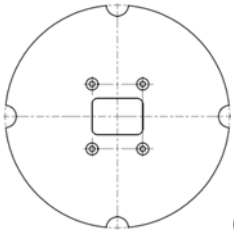

(No rim for wafer seating)

Outer diameter: 62 mm. Window size: 14 x 10 mm^2 (rounded corners). Total thickness: 1 mm. Material: molybdenum. Equipped with 4 index holes (spacing: 14 x 18 mm).

Please note that other window sizes are available on request also.

PN01842-S ***Wafer holder for 2" wafers (molybdenum), substrate thickness 0.5 mm***

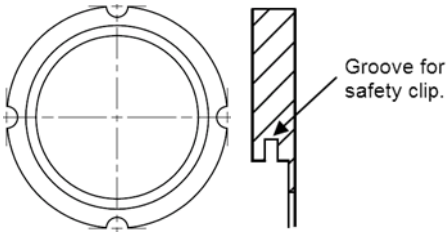

Outer diameter: 62 mm. Wafer size: 2". Total thickness: 2 mm. Substrate thickness: up to 0.5 mm with safety clip, or up to 1.7 mm without safety clip. Material: molybdenum.

R208922-S ***Wafer holder for 2" wafer (molybdenum), substrate thickness 0.7 mm***
Outer diameter: 62 mm. Wafer size: 2". Total thickness: 2 mm. Substrate thickness: up to 0.7 mm with safety clip, or up to 1.7 mm without safety clip. Material: molybdenum.

The substrate thickness of 0.7 mm enables a masking of the substrate for MBE applications. Wafer cover needs to be ordered separately.

R206291-S ***Wafer holder for 2" wafers (molybdenum)***

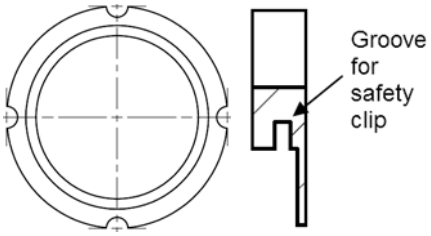

Outer diameter: 62 mm. Wafer size: 2". Total thickness: 2 mm. Substrate thickness: up to 0.28 mm with safety clip, or up to 1.7 mm without safety clip. Material: molybdenum.

R212787-S ***Wafer holder for 2" wafers (molybdenum)***

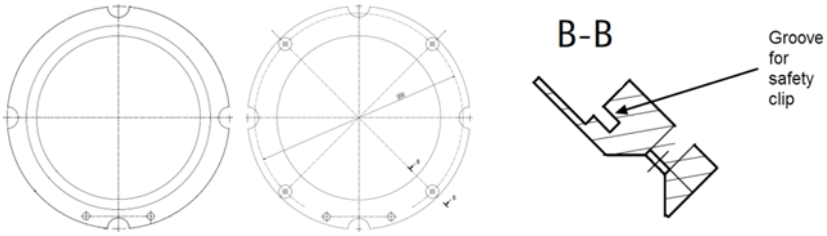

With 2x index pins and 4x index holes on the back side.

Outer diameter: 62 mm. Wafer size: 2". Total thickness: 3 mm. Substrate thickness: up to 0.5 mm with safety clip, or up to 2.7 mm without safety clip. Material: molybdenum.

PN01843-S ***Wafer retaining spring for 2"***

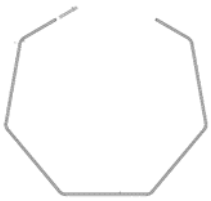

To be used as a safety clip for wafer holders with groove.

R215574-S ***Circlip for 2" wafer***

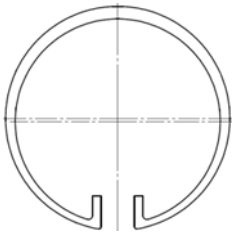

To be used as a safety clip for wafer holders with groove.

Sample plates for 3” MBE Systems

R220803-S ***Sample plate 3” (tantalum) with window for SO sample plate***

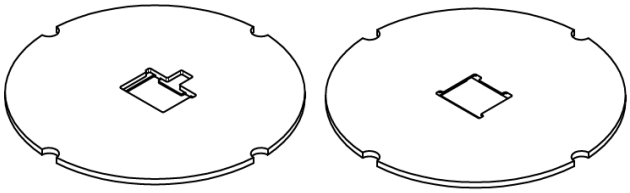

With window for Scienta Omicron standard sample plate. Outer diameter: 90 mm. (Square) window size: 16 x 14 mm^2 (rounded corners to fit the SO sample plate). Total thickness: 2 mm. Material: tantalum. Other materials on request. Available for 2” and 4” MBE Systems also.

Wafer holder for 4” MBE Systems

R212833-S ***Wafer holder for 4” wafers (molybdenum)***

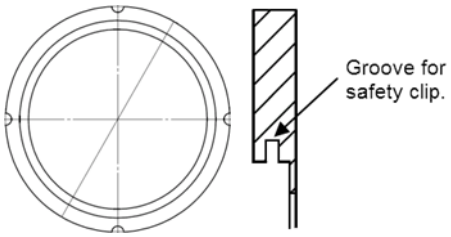

Outer diameter: 115 mm. Inner diameter: 91.5 mm. Wafer size: 4”. Total thickness: 2 mm. Substrate thickness: up to 0.5 mm with safety clip, or up to 1.7 mm without safety clip. Material: molybdenum.

PN05056-S ***Wafer holder for 4” wafers (molybdenum)***

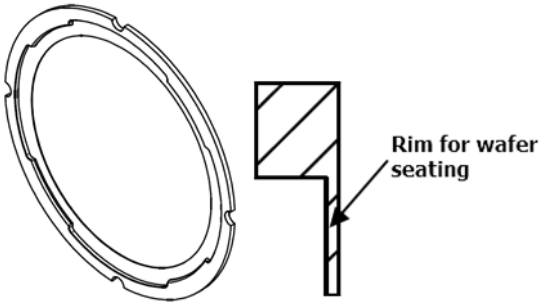

Outer diameter: 115 mm. Inner diameter: 91.5 mm. Wafer size: 4“. Total thickness: 2 mm. Material: molybdenum.

R215570-S ***Wafer holder for 2" wafers (molybdenum)***

(Only available in set R215576-S Wafer holder assembly for 2" wafer)

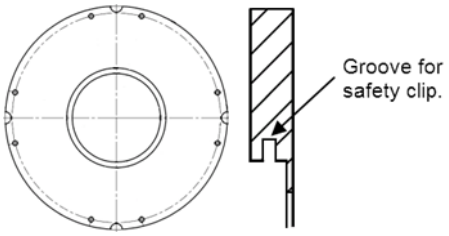

For 4" MBE Systems. Outer diameter: 115 mm. Inner diameter: 45.6 mm. Wafer size: 2". Total thickness: 2 mm. Substrate thickness: up to 0.7 mm with safety clip, or up to 1.7 mm without safety clip. Material: molybdenum.

R215576-S ***Wafer holder assembly for 2" wafers (molybdenum)***

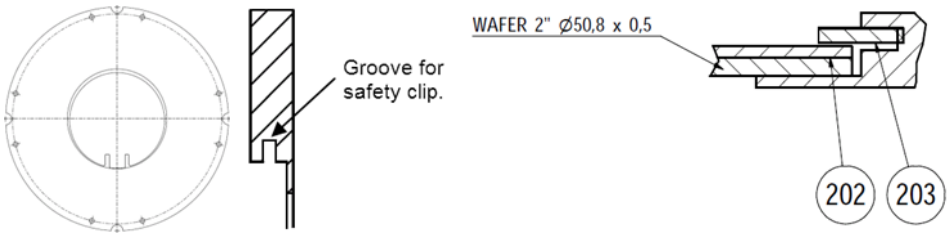

Set consisting of 1x R215570-S wafer holder, 1x R215572-S wafer cover (50.8 x 0.3 mm), 1x R215574-S wafer circlip for 2" wafer.

R215571-S ***Wafer holder for 1/4 segment 2" wafer (molybdenum)***

(Only available in set R215577-S Wafer holder assembly for ¼ segment 2" wafer)

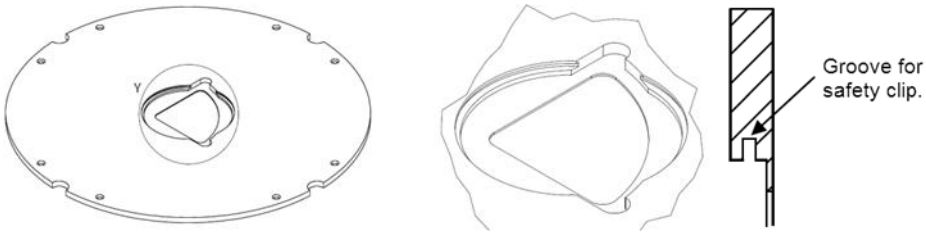

Outer diameter: 115 mm. Wafer size: 2", ¼ segment. Total thickness: 2 mm. Substrate thickness: up to 0.7 mm with safety clip, or up to 1.7 mm without safety clip. Material: molybdenum. Available for 2" and 3" MBE Systems also.

R215577-S ***Wafer holder assembly for 1/4 segment 2" wafer (molybdenum)***

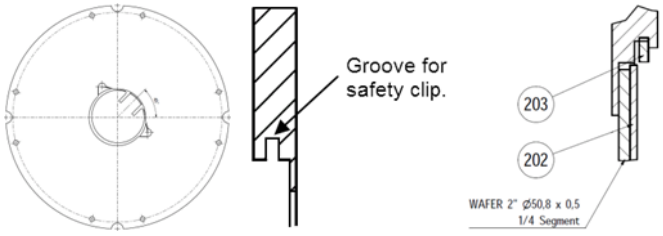

Set consisting of 1x R215571-S wafer holder, 1x R215573-S wafer cover (¼ segment of 2"), 1x R215575-S wafer circlip for 1.1" wafer. Available for 3" MBE Systems also.

R215592-S Wafer holder for 1/2 segment 2" wafer (molybdenum)

(Only available in set R215594-S Wafer holder assembly for 1/2 segment 2" wafer)

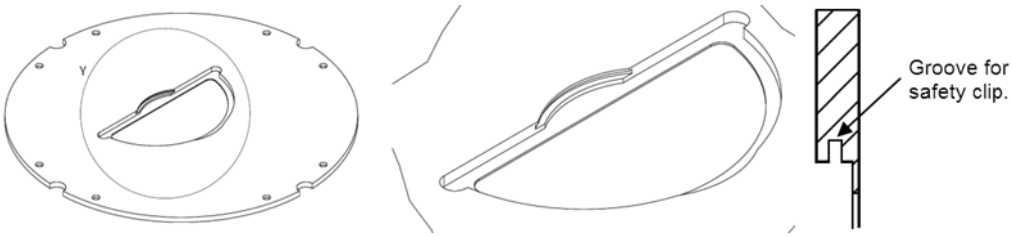

Outer diameter: 115 mm. Wafer size: 2", ¼ segment. Total thickness: 2 mm. Substrate thickness: up to 0.7 mm with safety clip, or up to 1.7 mm without safety clip. Material: molybdenum.

R215594-S Wafer holder assembly for ½ segment 2" wafer (molybdenum)

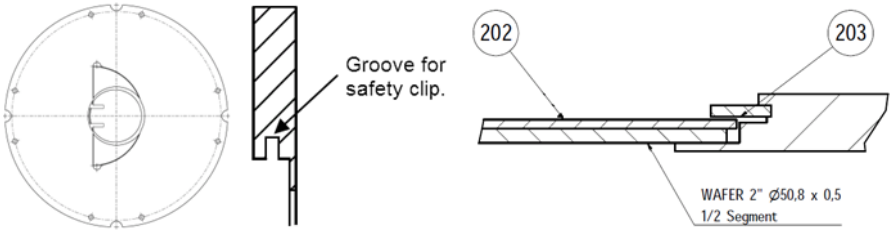

Set consisting of 1x R215592-S wafer holder, 1x R215533-S wafer cover (1/2 -Segment of 2", 0.3 mm), 1x R215575-S wafer circlip for 1.1" wafer. Available for 3" MBE Systems also.

CA02191-S Wafer retaining spring for 4"

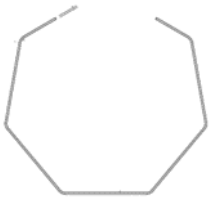

To be used as a safety clip for wafer holders with groove.

UHV parts

CF parts

Standard copper gaskets

UHV oxygen free copper gaskets for CF flanges, 2mm thickness

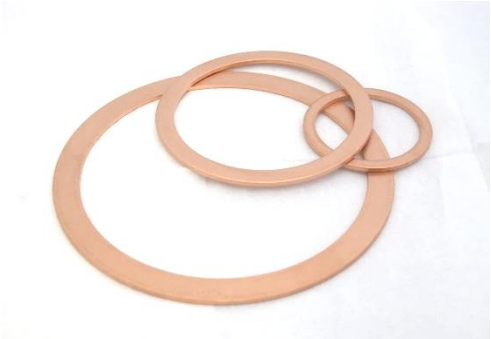

Part number	Type	Inner diameter (mm)	Outer diameter (mm)
F1300-S	CF34/ DN16	16	21.3
F1301-S	CF70/ DN40	39	48.1
F1302-S	CF114/ DN63	72	82.3
F1303-S	CF150/ DN100	101.6	120.5
F1304-S	CF200/ DN150	152.5	171.2
F1305-S	CF250/ DN200	203.4	220.1
F209900-S	CF300/ DN250	254	270.1
CA05665-S	CF305/ NW250	254	272.7
F1306-S (surface etched)	CF336/ DN276	276	294.0
F130500-S	CF364/ DN300	305	321.1

Please note: For large flanges, deviations from the norm are not uncommon. In case of doubt, please contact Scienta Omicron Services with information about the chamber flange in question.

S123100-S ***Copper gasket package***
Contains:

- 10x ***F1300-S*** Copper gasket DN16CF
- 10x ***F1301-S*** Copper gasket DN40CF
- 10x ***F1302-S*** Copper gasket DN63CF
- 10x ***F1303-S*** Copper gasket DN100CF
- 10x ***F1304-S*** Copper gasket DN150CF

F1309-S ***Viton gasket DN63CF***

Alternative CF flange gasket for fast entry locks. Inner diameter 63 mm, outer diameter 82 mm. Bakeable up to 150 °C (temporarily up to 200 °C). To be reused multiple times.

CA10040 ***Viton gasket for viewport door DN100CF***

Gasket for viewport door on ESCA+ fast entry lock. Inner diameter 107.5 mm, thickness 3.53 mm.

CA12905 ***Viton gasket for viewport door DN150CF***

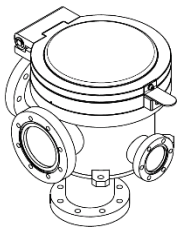

Gasket for quick access door with window DN150CF (F101201) e.g. on FEL (R218890) at XPS Lab.

PN07497 ***O-ring for quick access door DN63 (2 off)***

O-rings for quick access door with window (black part of image to the left).
For FEL DN63CF.
Set of 2.

PN04484-S ***Viton O-rings for inline FEL (5 off)***

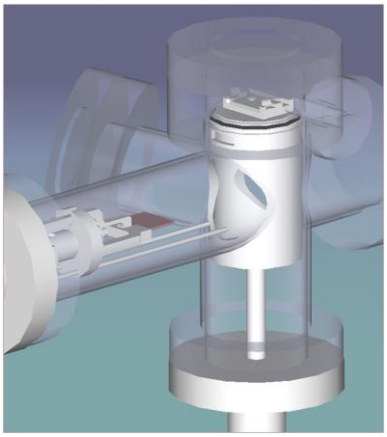

O-rings for inline fast entry load lock (black part of image to the left).
Dimensions: 33 x 2 mm.
Set of 5.

Blank CF flanges

Part number	Type	Flange thickness (mm)	Bolt hole diameter (mm)
F1130-S	CF34/ DN16	7.6	4.3 (M4)
F1131-S	CF70/ DN40	13	6.8 (M6)
F1132-S	CF114/ DN63	17.5	8.4 (M8)
F1133-S	CF150/ DN100	20	8.4 (M8)
F1134-S	CF200/ DN150	22	8.4 (M8)
F1135-S	CF250/ DN200	24.5	8.4 (M8)

Viewport CF flanges

Part number	Type	View diameter (mm)
F118401-S	CF34/ DN16	16
F1184-S	CF70/ DN40	38
F1180-S	CF114/ DN63	63
F1181-S	CF150/ DN100	90
F1183-S	CF200/ DN150	136

Viewport CF flanges with X-ray protection lead glass

Thickness	Maximum lead equivalence (mm) for stated X-ray tube voltage					
mm	100 kV	110 kV	150 kV	200 kV	250 kV	300 kV
5 - 6,5	1,7	1,6	1,5	1,4	1,3	1,2

Part number	Type	View diameter (mm)
R218752-S	CF34/ DN16	15
R218753-S	CF70/ DN40	32
R218754-S	CF114/ DN63	63
R218745-S	CF150/ DN100	89
R218755-S	CF200/ DN150	136

Valves

Gate valves

Manual gate valves

Bakeable up to 200 °C.

Part number	Type
F1850-S	DN40CF
F9032-S	DN63CF
F1854-S	DN100CF
F1856-S	DN160CF

Pneumatic gate valves

Gate valves with pneumatic actuators. No accessories included.

Part number	Type
F185100-S	DN40CF
F185300-S	DN63CF
F903302-S	DN100CF
F185700-S	DN160CF

Gate-valve gaskets

Set of gaskets for gate valve. The set contains the gasket plate and housing gasket.

F185002-S DN40CF

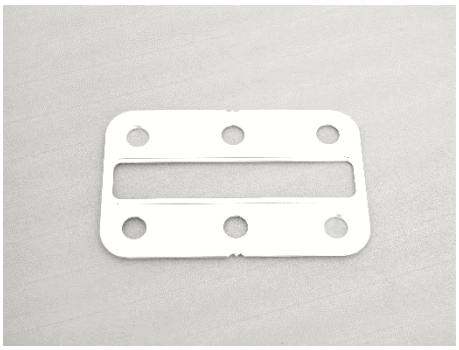

PN04095-S DN63CF

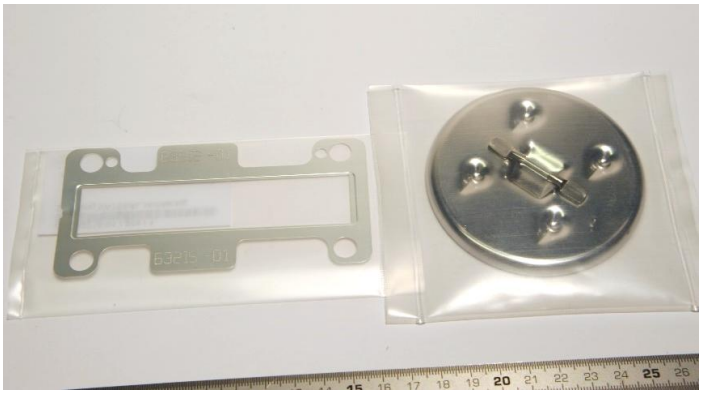

F130900-S DN100CF

PN00401-S DN160CF

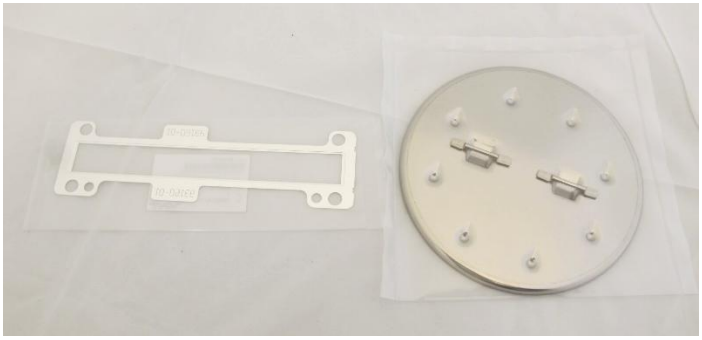

F185108-S DN100CF

Aluminum housing gasket only.

Right angle valves

F2020-S ***All metal right angle valve DN16CF***

Fully welded all metal right angle valve with rotatable DN16CF flanges. Bakeable up to 300 °C closed and 450 °C open. Spare copper pad ***PN04871-S*** available.

F182000-S ***All metal right angle valve DN40CF***

Fully welded all metal right angle valve with rotatable DN40CF flanges. Bakeable up to 300 °C closed and 450 °C open. Spare copper pad ***F182002-S*** available.

Gas inlet valves

D0005-S ***Manual valve (Nupro)***

This bakeable gas inlet valve with Swagelok connectors is replaced by a new product. Please contact Scienta Omicron for additional information.

R222163-S ***All metal leak valve***

All metal right angle leak valve, 2x DN16CF. Replaces F2114-S for instruments like ISE 5/10/100 and HIS13.

Up to 10 bar inlet pressure. Bakeable up to 250 °C closed and 450 °C open. Always bake with both ports under vacuum.

F211400-S ***Service kit for leak valve F2114-S (discontinued 2022) – diaphragm and pad assembly***

Service kit for leak valve F2114-S. Contains diaphragm core, pad and gold seal. Recommended for valves which fail after a high number of bake-out cycles.

Leak valve F2114-S:

F211401-S ***Service kit for leak valve F2114-S (discontinued 2022) – sealing pad***

Service kit for leak valve F2114-S. Contains sealing pad, gold seal and special spanner. Recommended if the valve appears to be leaky.

Leak valve F2114-S:

Pressure measurement

Ion gauge

PN00228-S ***Ion gauge head***

Bayard-Alpert ion gauge for vacuum range 1 x 10^{-3} to 3 x 10^{-11} mbar, mounted on DN40CF flange. The gauge is equipped with a twin Thoria-coated Iridium filament.

Mounting the gauge, the filament should be placed below the grid structure:

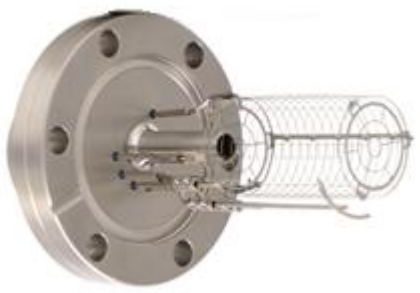

PN00424-S ***Filaments for ion gauge***

Spare twin Thoria-coated Iridium filament set for ion gauge ***PN00228-S***. Replaces F2017.

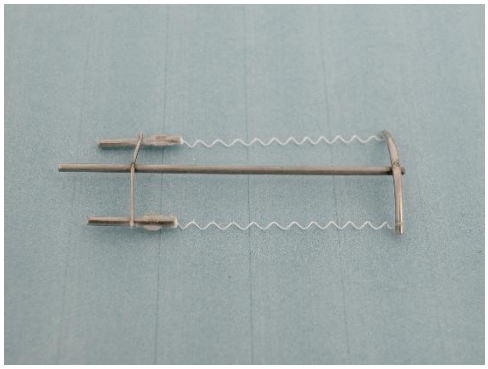

PN05081-S ***Ion gauge controller PVC uni***

Ion gauge controller for rack-mounting (19” x 1U). Includes support for one UHV ion gauge, one Pirani gauge and one thermocouple for bake-out control.

Pirani gauge

PN04310-S Pirani gauge

Pre-adjusted Pirani sensor with temperature compensation, for vacuum range 100 to 0.001 mbar. Mounted on DN16KF flange.

PN05325-S Connection cable for Pirani gauge

To connect Pirani sensor with ion gauge controller. Length 12m.

Pumps

Ion Getter Pumps

PN00109-S ***HV Cable for ion getter pump, bakeable, 7 m***
Suitable for IGPs with Fischer feedthrough on pump-side and Fischer connector on controller-side.

High voltage cables for IGP with SAFECONN on pump-side and controller-side, bakeable, available in different lengths:

PN06417-S	3 m
PN03060-S	6 m
PN04583-S	8 m
PN04869-S	10 m
PN04839-S	15 m

Titanium Sublimation Pumps

F2000-S ***Titanium sublimation pump***
Three filament Titanium sublimation pump for secondary pumping.
Mounted on DN40CF flange. Insertion depth from flange is 203 mm.

PN04404-S ***TSP filaments***
Set of 12 Titanium molybdenum alloy filaments for Titanium sublimation pump ***F2000-S***. TSP filaments need to be exchanged on a regular basis. Typical signs of wear are fragmentation and bending out of shape, up to breaking.

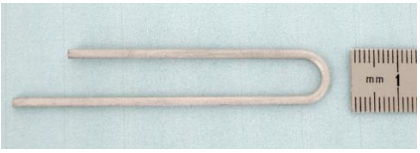

R194123-S ***Replacement TSP filament clamps***

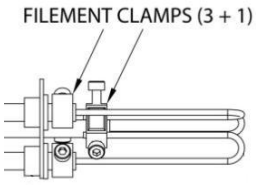

Set of 4 TSP filament clamps.

PN04691-S ***Spare insulator bushes for TSP***
Set of 3 insulator bushes.

PN07370-S T***SP Filaments for Gamma Vacuum getter pumps***
Set of 6 TSP filaments.

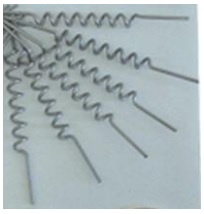

PN07904-S ***TSP Filaments for Agilent getter pumps***
Set of 6 TSP filaments.

Scroll pumps

CA00092-S ***Tip seal kit for scroll pumps XDS***
Suitable for scroll pumps XDS5, XDS10. Please note: XDS5 and XDS10 are replaced by *nXDS series*.

PN04865-S ***Tip seal kit for scroll pumps nXDS series***
Suitable for scroll pumps nXDS6i, nXDS10i, nXDS15i, nXDS20i.

PN07639-S ***Tip seal kit for scroll pumps IDP series***
Suitable for scroll pumps IDP7 and IDP10.

Bake-out

F9016-S ***Thermocouple type K***

Ring-shaped thermocouple (6 mm inner diameter) for system bake, 2 m cable with K-type thermocouple plug.

D0013-S ***Ring-heater element for bench or for bake-out-panel fan-heaters***

240 V/ 2.5 kW ring-heater element for fan-heaters placed on the bench and for fan-heaters placed in bake-out panels.

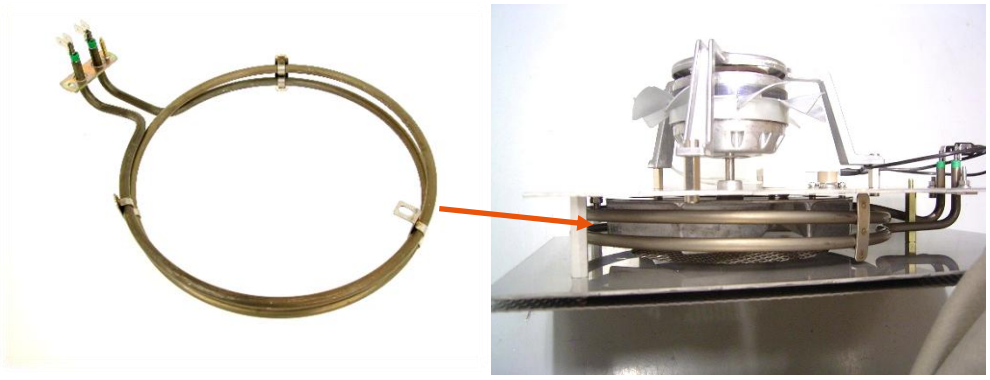

Please note: Systems built after 2017 might have a newer version of ring heater elements, see ***R206675-S***.

R206675-S ***Ring-heater element for radial-fan heaters (at flexible bake-out covers)***

240 V/ 2.45 kW ring-heater element for radial-fan heaters placed in flexible bake-out covers (new type of ring heater, from approx. 2017 on). This ring-heater element is available as part of ***R216762 2.45kW heater assembly*** also (easily identifiable by Scienta Omicron logo at the perforated plate). Please contact Scienta Omicron Service for additional information.

R206675-S

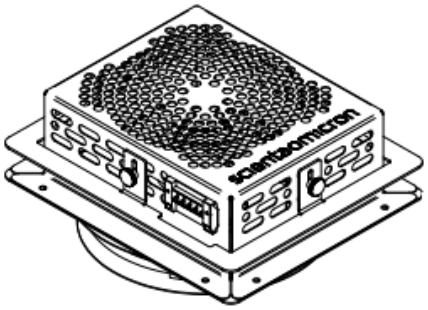

R216762

PN05607-S Finned heater set, 750 W

This set contains 1x ***CA13352-S finned heater 750W*** which is commonly used inside a closed bench below a UHV system. ***CA13352-S*** replaces ***D7501-S***.

In case the previous heater model ***D7501-S*** is replaced, the cables need to be modified to fit the new clamp connection of ***CA13352-S***. Required material is contained in this set also. This modification is recommended to be done by an Electrician.

CA13352-S

PN05608-S Finned heater set, 250 W

The set contains 1x ***CA13353-S finned heater*** which is commonly used inside a closed bench below the system to heat IGPs. These heater elements are typically bent to custom shape during system manufacturing for optimal IGP heating. Please specify the desired shape on order. ***CA13353-S*** replaces ***D7502-S***.

In case the previous heater model ***D7502-S*** is replaced, the cables need to be modified to fit the new clamp connection of ***CA13353-S***. Required material is contained in this set also. This modification is recommended to be done by an Electrician.

CA13353-S

Heater shrouds

Replacement shrouds for high power probes with internal heater band and silicon-sealed isolating jacket.

Part number	Length	Heater power
PN06741	200 mm	40 W
PN05639	300 mm	40 W
CA12863	400 mm	60 W
PN06283	450 mm	60 W
PN05716	550 mm	80 W
CA13309	600 mm	80 W
CA05104	700 mm	100 W
PN05678	800 mm	100 W
CA12864	900 mm	100 W
CA12865	1100 mm	150 W
CA04355	1300 mm	150 W
PN06636	1500 mm	200 W
PN06637	1750 mm	250 W
CA13653	1900 mm	250 W

System accessories

F9049-S ***System bench levelling foot***

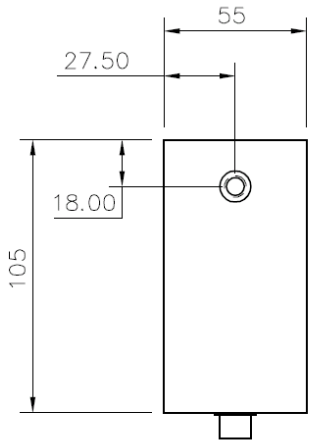

Up to 4000 N load; adjustable height 102 mm +4/ -5 mm.

Manipulator Sample Stages

Scienta Omicron offers a multitude of sample stages with various heating and cooling options. Custom solutions and spare parts for individual stages are always possible upon request. This section lists the standard version of our heater stages, most used in Scienta Omicron systems. Please note that you will find also information about discontinued heaters and associated spare parts in the corresponding chapters of this section.

Overview

	Resistive PBN heater	**E-beam heater**	**High temperature heater**
Spare filament	***E2211-S***	***PN05532-S***	***PN05532-S***
Heater module	***E2929-S*** (one rot. axis) ***PN00374-S*** (two rot. axes)	***R220694-S***	***R220694-S***
Heater Facility	***PN01719-S***	***R220695-S***	***R220695-S***
Upgrade package	***PN06739-S***	***PN07422-S***	***PN08017-S***
Ex-vacuum cables	***K7821-S*** *(current)* ***K781200-S*** *(previous)*	***PN07207-S*** (for e-beam) ***PN07208-S*** (for DH)	***PN04350-S***
Power supply	***PN02985-S*** (750 W)	***CA14909***	***PN02985-S*** (750 W)

Resistive tungsten wire sample heater

S7106 Resistive wire heater

Please note: For most applications, the resistive tungsten wire sample heater S7106 was replaced by the PBN sample heater. An upgrade package from resistive tungsten wire heater to PBN heater PN06739-S is available, see below.

Available spare part:

F200103-S Spare filament for resistive wire heater S7106

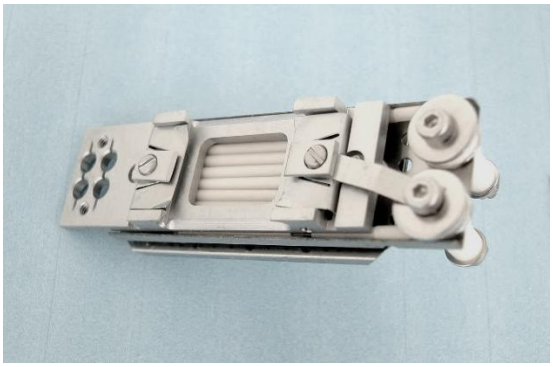

Resistive PBN sample heater

PN01719-S Resistive PBN sample heater facility for primary rotation (RH 1 C)

The PN01719-S resistive sample heater facility (RH 1 C), including sample heater and support arm, is ready to be mounted to a manipulator rotary drive rod with 9.5 mm in diameter. The direct heating (DH) brush is included. Please specify orientation of heater brush upon order. Wires for electrical connections are not included.

- 100 W pyrolytic boron nitride (PBN) heater (temporarily: 110 W)
- Maximum current: 5 A
- Maximum sample plate temperature: 1130 K (1100 K with LN2 cooling facility installed)

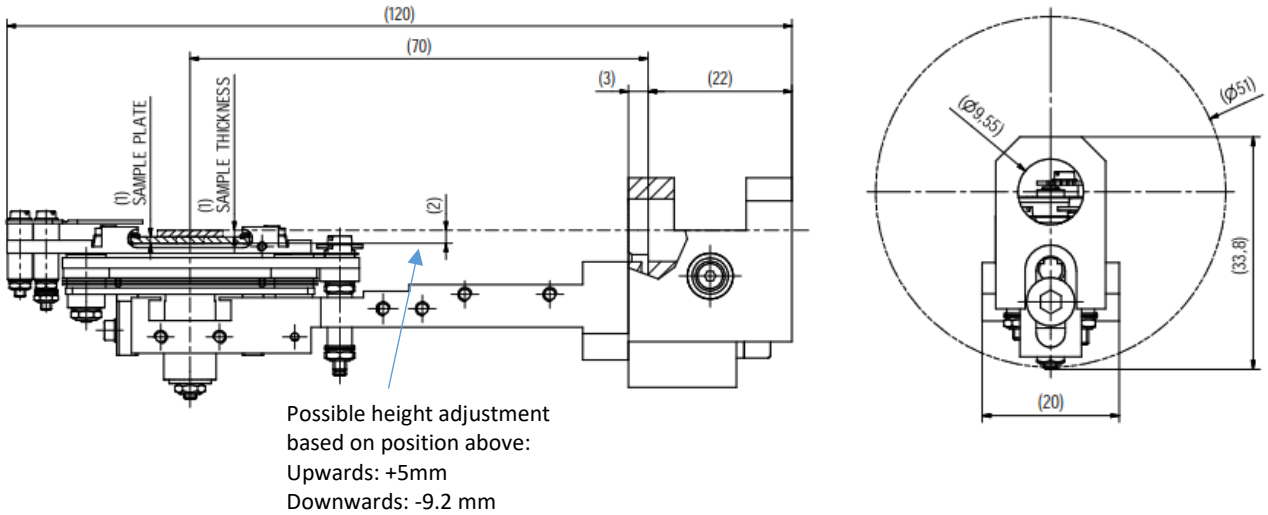

PN06739-S PBN sample heating upgrade package

For standard Scienta Omicron manipulators, specifically ones outfitted with the S7106 resistive tungsten wire heater, the resistive PBN sample heater is available as a predefined upgrade package.

The package contains:

- Resistive sample heater for primary rotation **E2929-S**
- Support arm **E2364**
- Parts for custom in-vacuum wiring of heater
- In-vacuum thermocouple
- Ceramics set.

Please refer to the respective Upgrade Flyer for details.

Spare parts for PN01719-S resistive PBN sample heater facility for primary rotation

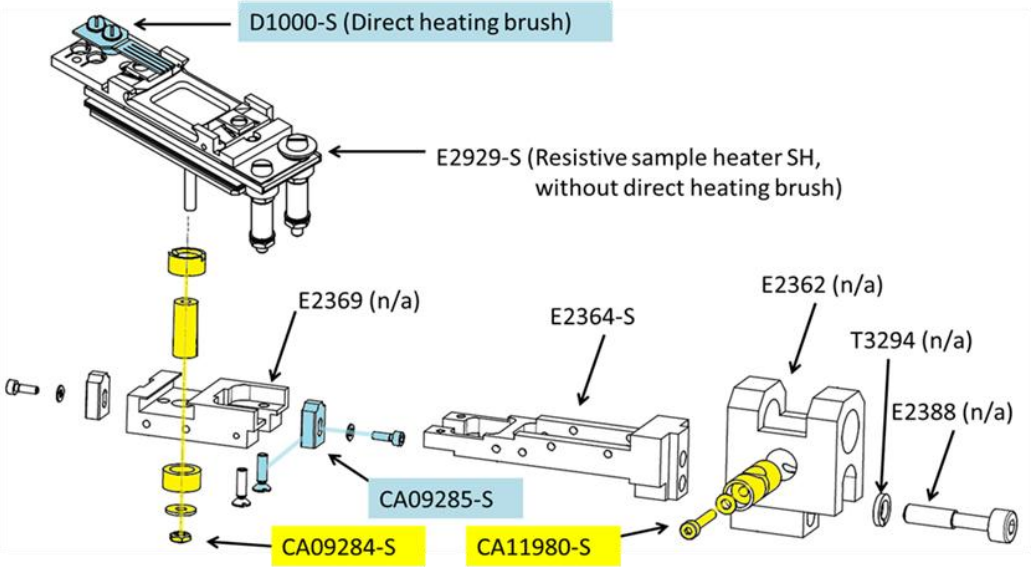

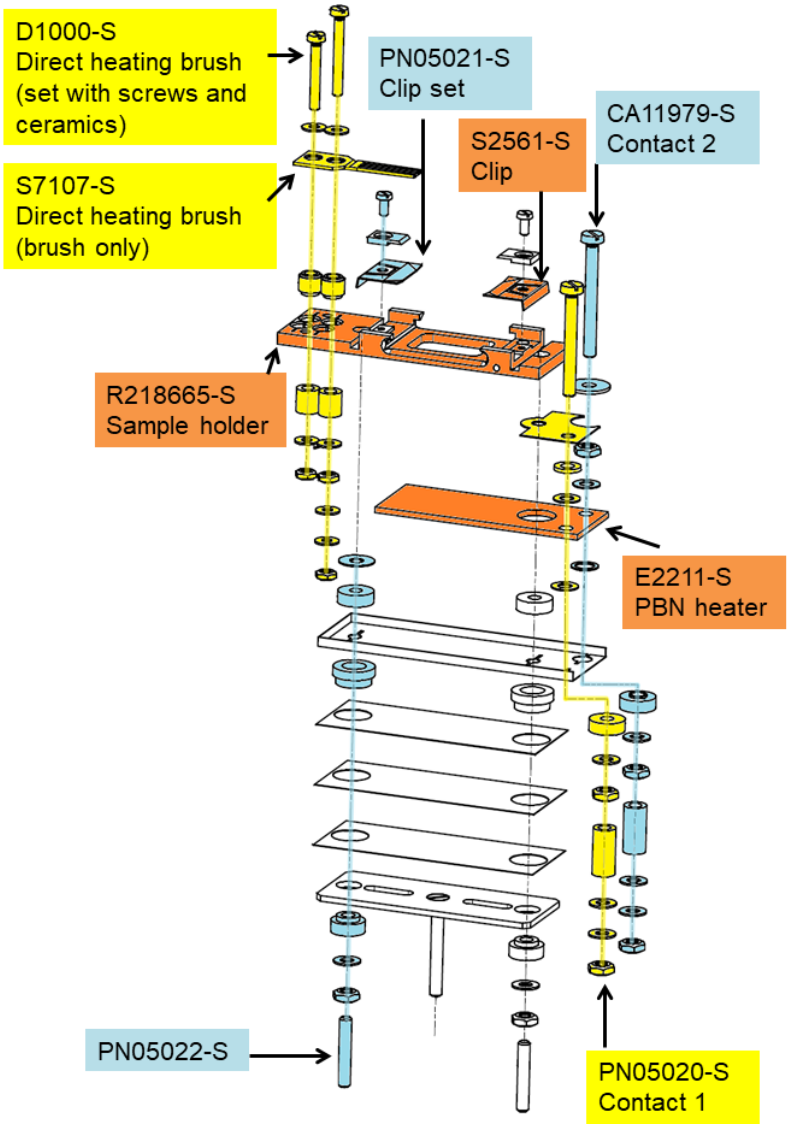

E2929-S ***Resistive sample heater for primary rotation***

Please note that the direct heating brush D1000-S is not included and has to be ordered separately.

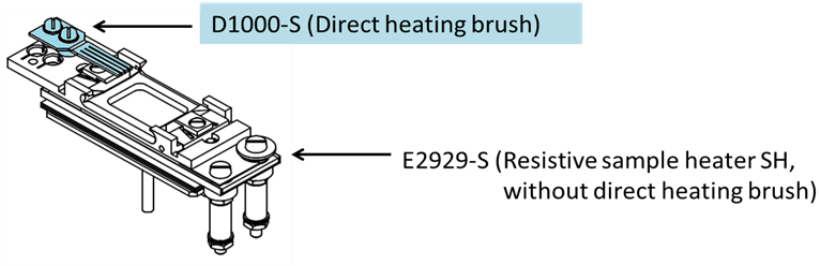

D1000-S ***Direct heating brush set***

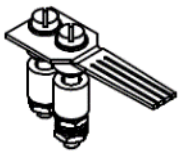

PN05021-S ***Sample clip set***

R218665-S ***Sample holder (replaces S2180-S)***

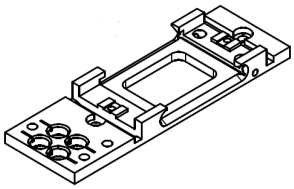

CA09554-S ***Ceramic set for resistive sample heater (primary rotation)***

This set consists of the ceramics contained in 2x PN05022-S, 1x PN05020-S and 1x CA11979-S. Only ceramics, no other parts are included.

E2211-S ***PBN heater element***

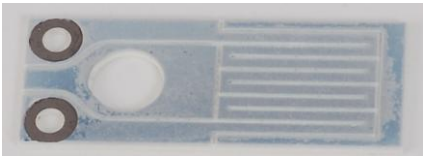

PN01721-S Resistive PBN sample heater facility for secondary rotation (RH 2 C)

The PN01721-S resistive sample heater facility for secondary rotation (RH 2 C), including sample heater and support arm, is pre-assembled and can be mounted on a HPT, Omniax, Miniax or Transax manipulator with double axis rotation. The direct heating (DH) brush is already included. Wires for electrical connections are not included.

- 100 W pyrolytic boron nitride (PBN) heater (temporarily: 110 W)
- Maximum current: 5 A
- Maximum sample plate temperature: 1130 K (1100 K with LN2 cooling facility installed)

Spare parts for Resistive PBN sample heater for secondary rotation:

The following spare parts are available for ***PN01721-S*** resistive PBN sample heater facility for secondary rotation:

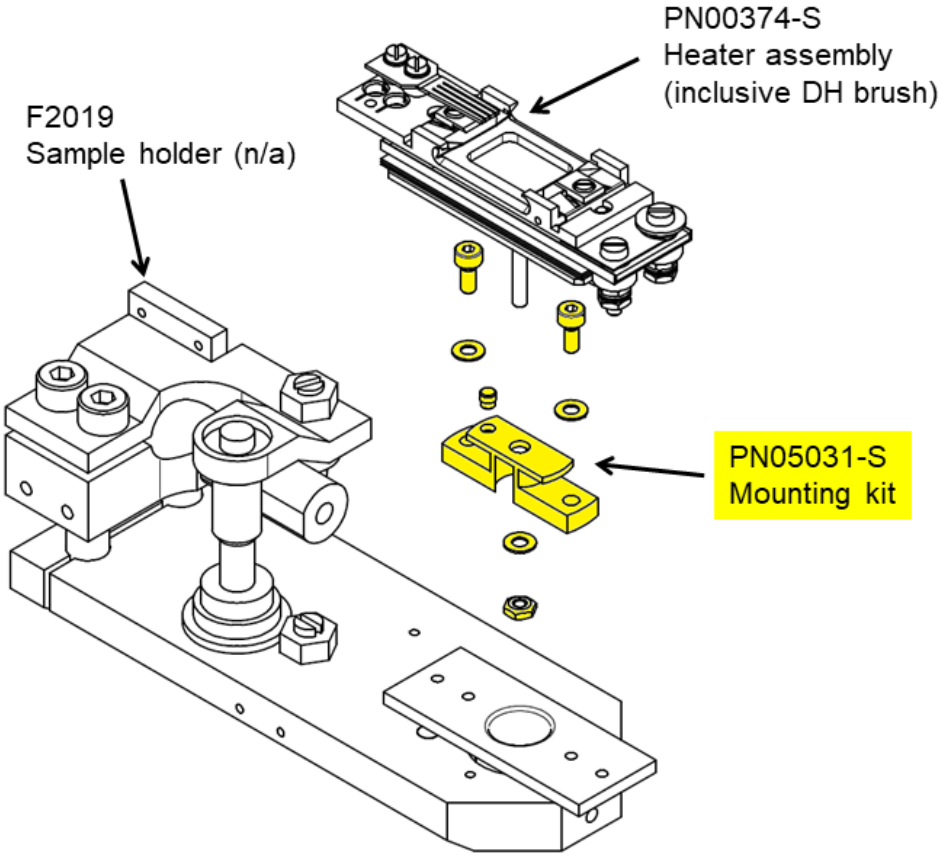

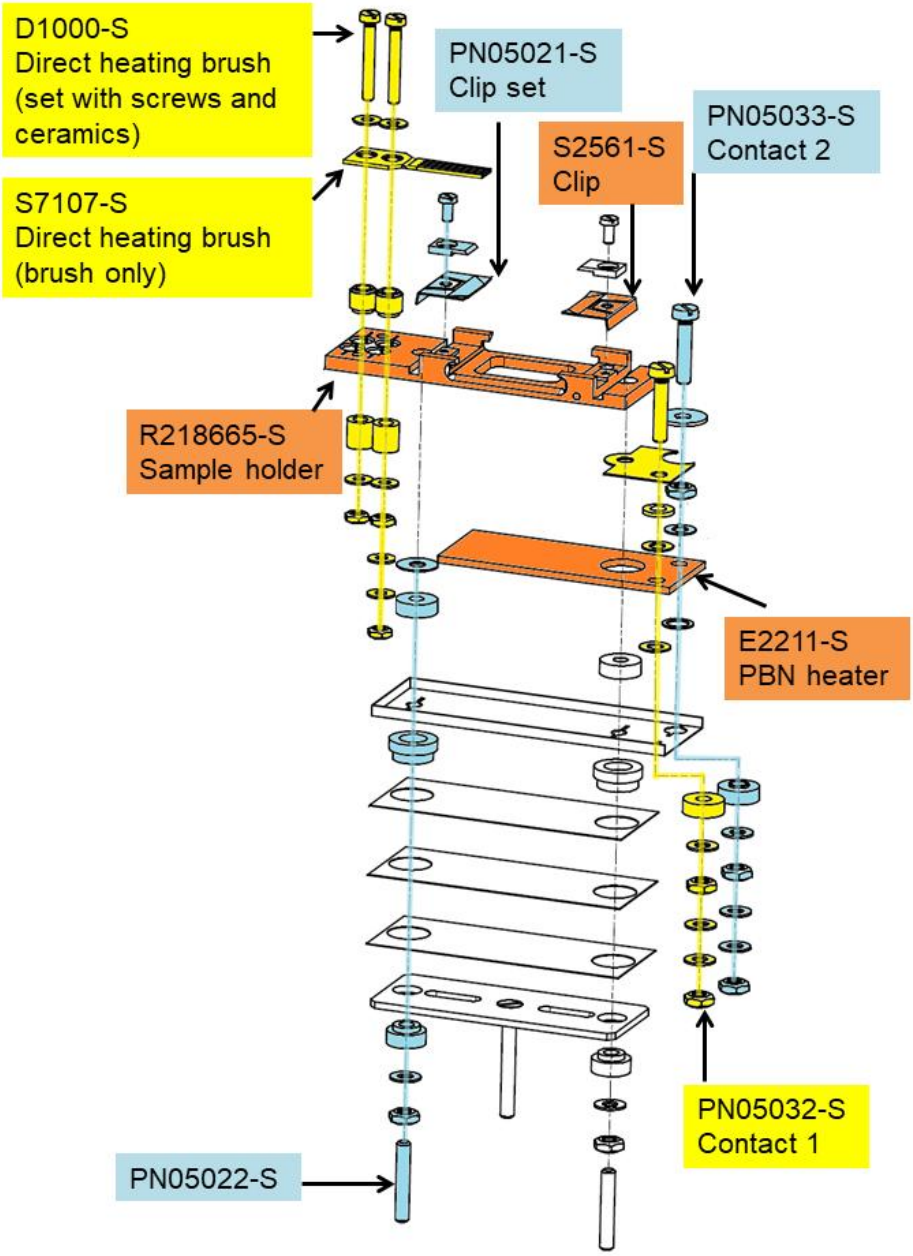

PN00374-S ***Resistive sample heater for secondary rotation***

D1000-S is included in ***PN00374-S***.

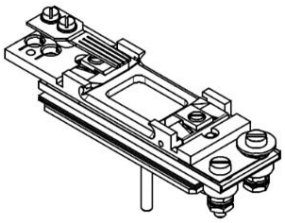

E-beam sample heater

PN01720-S Old-type E-beam sample heater (1370 K)

Please note that the old type e-beam heater facility ***PN01720-S*** with thoriated tungsten filament is discontinued.

The following spare parts for PN01720-S are still available.

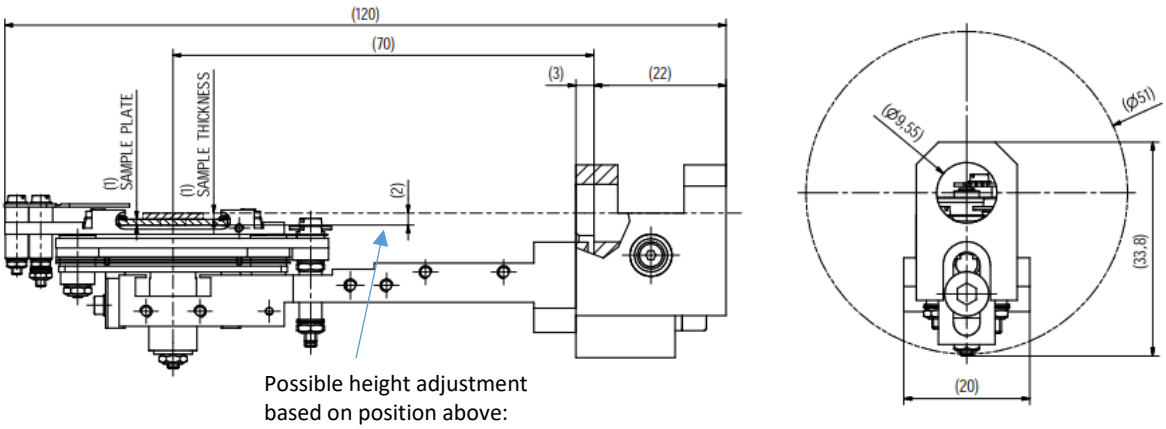

Possible height adjustment based on position above:
Upwards: +5mm
Downwards: -9.2 mm

The following spare parts are still available for PN01720-S E-beam sample heating facility (EBH 1 C):

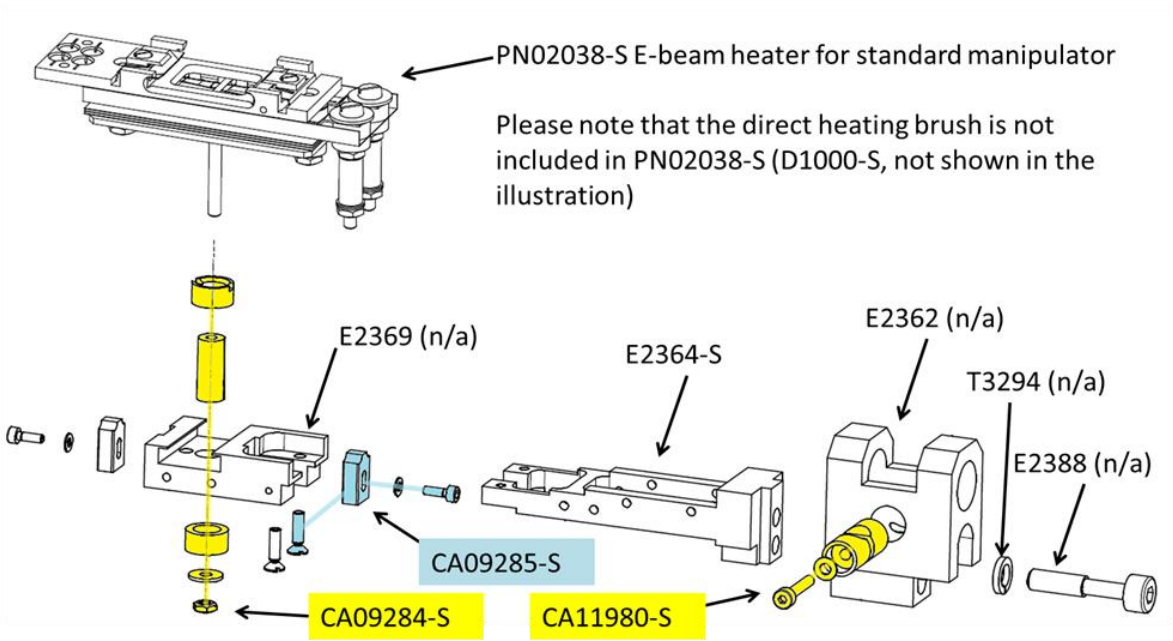

PN02038-S ***E-Beam sample heater for standard manipulator***

Please note that the direct heating brush has to be ordered in addition (D1000-S, not shown in the illustration below).

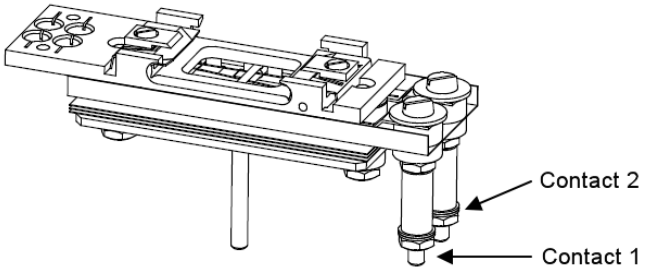

The following spare parts for PN02038-S E-Beam Heater are available:

PN05028-S ***Contact 1 for e-beam heater***

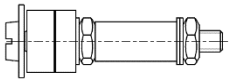

PN05029-S ***Contact 2 for e-beam heater***

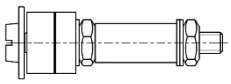

D1000-S ***Direct heating brush set***

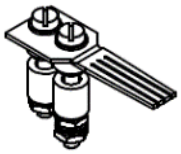

PN05021-S ***Sample clip set***

R218665-S ***Sample holder (replaces S2180-S)***

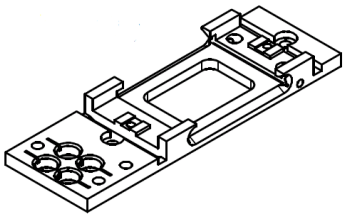

CA04139-S ***Filament support ceramics***

Approximately 16 mm long and 1 mm in diameter. Minimum order quantity: 6.

F200102-S ***Filament for e-beam heater***

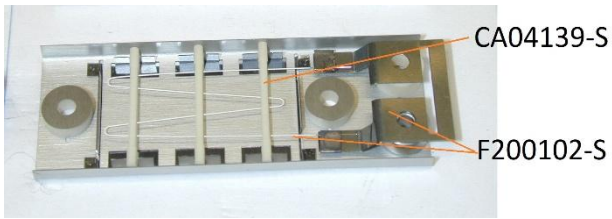

Filament housing and filament support ceramics are not included. To mount the filament, a total of 6 **CA04139-S** filament support ceramics is required.

PN05030-S ***Base mount set for e-beam sample heater***
This corresponds to PN05022-S of the standard heater (E2929-S) – the only difference is the topmost ceramic.

PN06854 ***E-beam heater facility for secondary rotation (EBH 2 C)***
Please note that some spare parts and ceramics for the E-beam heater for secondary rotation are different than the ones for primary rotation. Please contact Scienta Omicron Services for support.

R220695-S High temperature e-beam sample heater facility (1670 K)

The **R220695-S** High temperature e-beam heating facility, including sample heater and support arm, is ready to be mounted to a manipulator rotary drive rod with 9.5 mm in diameter. The direct heating (DH) brush is already included. In-vacuum electrical wiring is not included.

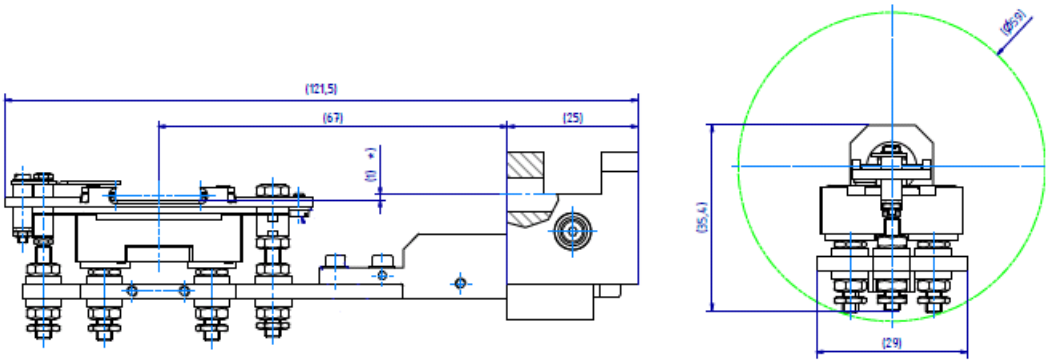

- W-Filament; Max I_{Fil} = 10 A.
- Max. sample temperature 1400 °C/ 1670 K @ 300 W.
- Higher heating rates in EBH mode; sample acceptor stays on ground potential, while heater filament floats on negative HV.
- RH mode (250 W) for better control at low temperatures.
- Sample acceptor made from Molybdenum and multi-layer radiation shield made of Ta foil.
- Direct current heating (DH) in conjunction with SO's DH sample plates.

PN07422-S E-beam heater upgrade package, high temperature version

For standard Scienta Omicron manipulators, specifically ones outfitted with the old type of e-beam heater, the new HT version of e-beam sample heater is available as a predefined upgrade package.

The package contains:

- High temperature e-beam heater stage including sample heater and support arm.
- Parts for custom in-vacuum wiring of heater.
- Ceramics set.
- In-vacuum thermocouple, feedthrough for thermocouple
- Feedthroughs for EBH, RH and DH, crimp connectors.
- High voltage power supply for EBH and RH; cable set for heater stage

Please refer to the respective Upgrade Flyer for details.

Spare parts for R220695-S High temperature e-beam sample heater

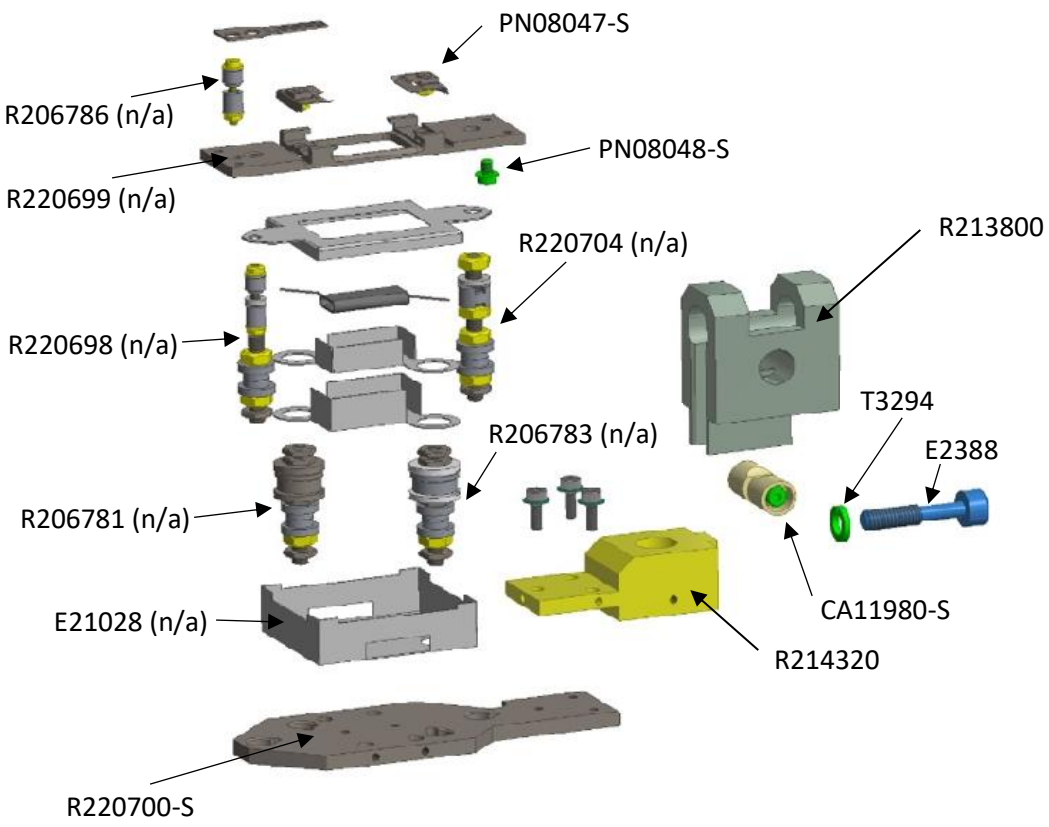

R220694-S ***HT- and e-beam heater assembly***

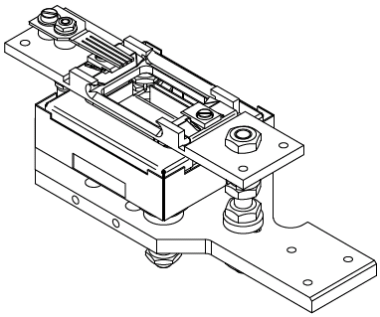

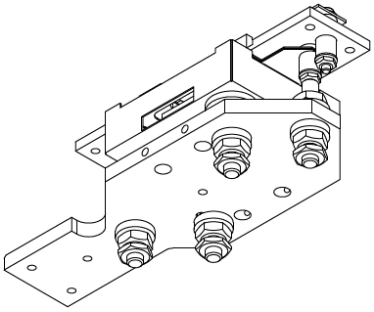

R220696-S ***Sample acceptor and contacts assembly***

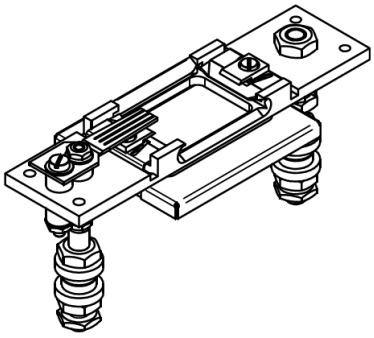

Please note that, as correct distances are of high importance for the use of the e-beam heater, the contact assembly stacks *R200698* and *R220704* are not sold separately but only as part of this assembly.

R220697-S ***Sample acceptor assembly for HT and e-beam heater stage***

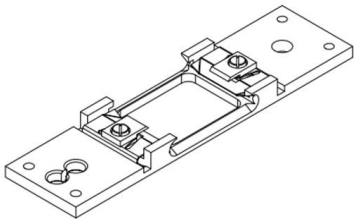

Please note that due to wear of Molybdenum parts of the sample acceptor, *R220699 Base plate* is only available as part of this assembly.

PN08047-S ***Sample clip set for HT and e-beam heater***

PN08049-S ***Direct heating brush set for HT and e-beam heater***

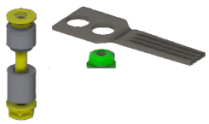

The set includes the DH brush as well as 1x R206786 Contact assembly and 1x Molybdenum nut of R220698 for mounting the brush to the sample acceptor plate.

PN05532-S ***Spare filament kit for high temperature e-beam sample heater (1670 K)***

This kit contains:

- 5x tungsten filament
- 1x molybdenum studs M3 (part of R220704)
- 1x molybdenum studs M3 – M1.6 (part of R220698)
- 2x filament mount (part of R206781 and R206783)
- 6x molybdenum lock nut M3 (part of R206781, R206783, R220698 and R220704)
- 4x molybdenum nuts M3 (part of R206781, R206783, R220698 and R220704)
- 2x molybdenum nuts M1.6 (part of R220698)

Please note that these parts are not sold separately. This set is composed under consideration of the different lifetimes of the parts.

R220700-S ***Base plate for HT and e-beam heater***

High temperature sample heaters

R212425 Old-type high temperature heater stage (1670 K)

Please note that this old-type high-temperature heater stage is discontinued. For the old-type high temperature heater, the filament ***PN05532-S*** is still available as a spare part.

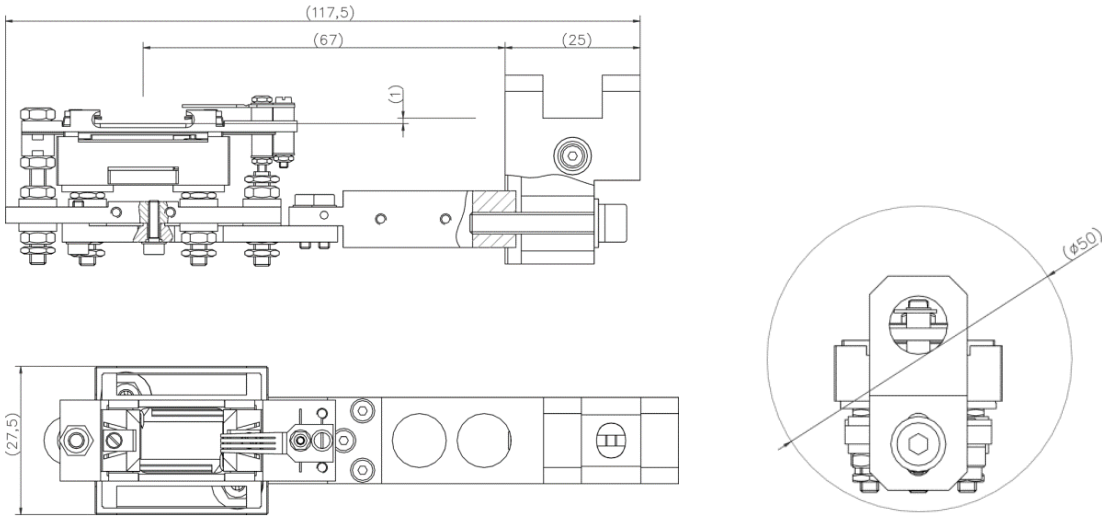

R220695-S High temperature heater stage (1670 K)

This new high-temperature heater stage (HTHS) for radiative high-power heating, including sample heater and support arm, is ready to be mounted to a manipulator rotary drive rod with 9.5 mm in diameter. The direct heating (DH) brush is already included. In-vacuum electrical wiring is not included.

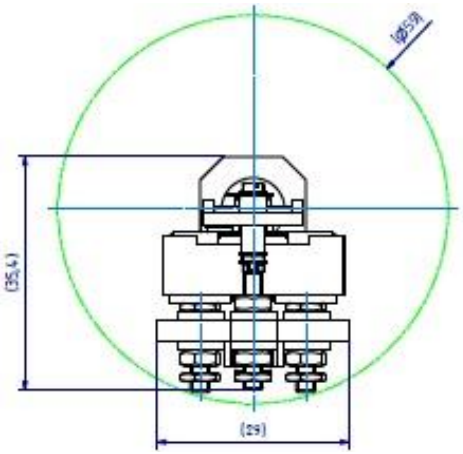

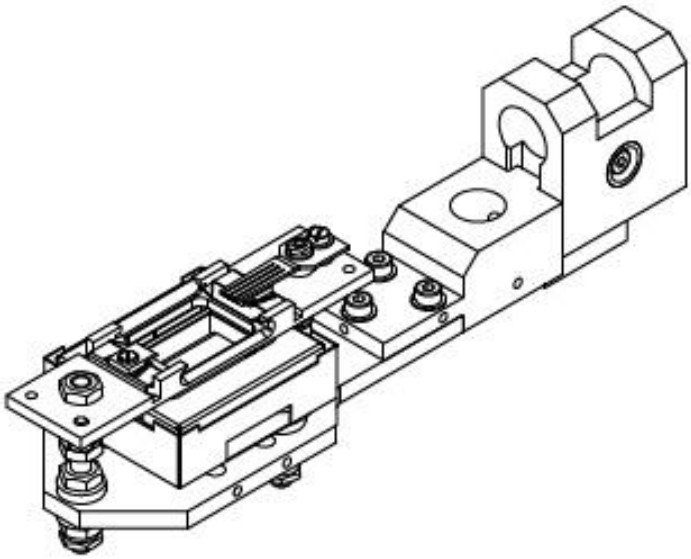

- W-filament heater, maximum filament power 250 W, temperature range: room temperature...1670 K
- Sample heater stage with acceptor made from Molybdenum and multi-layer radiation shield made of Ta foil.
- Direct current heating in conjunction with Scienta Omicron's DH sample plates.

PN08017-S High temperature heater stage upgrade package (1670K)

For standard Scienta Omicron manipulators, specifically ones outfitted with the old type of high temperature heater, the new HT heater stage is available as a predefined upgrade package.

The package includes:

- High temperature heater stage including sample heater and support arm.
- Parts for custom in-vacuum wiring of heater.
- Ceramics set.
- Feedthroughs for heater and thermocouple, crimp connectors.
- Cable set for heater stage. Power supply is available as an option.
- Reference thermocouple (type K) attached to the sample acceptor block close to the sample acceptance for best possible precision.

Please refer to the respective Upgrade Flyer for details.

PN05532-S ***Spare filament kit for high temperature sample heater (1670 K)***

This kit contains:

- 5x tungsten filament
- 1x molybdenum studs M3
- 1x molybdenum studs M3 – M1.6
- 2x filament mount
- 6x molybdenum lock nut M3
- 4x molybdenum nuts M3
- 2x molybdenum nuts M1.6

Please note that these parts are not sold separately. This set is composed under consideration of the different lifetimes of the parts.

High temperature sample heater (2500 K)

CA09051-S ***Spare filament kit for high temperature sample heater (2500 K)***

This kit contains:

- 5x tungsten filament
- 2x molybdenum studs M3 x 38
- 2x filament mount
- 4x molybdenum lock nut M3
- 8x molybdenum nuts M3

Please note that these parts are not sold separately. This set is composed under consideration of the different lifetimes of the parts.

Manipulator electrical connections

In-vacuum wiring

During HT heater operation, the wires close to the heater will also heat up. The last few cm's are therefore isolated by ceramics. For high temperature heaters, also the wire itself is replaced by heat-resistant material which is attached with barrel connectors.

Please contact Scienta Omicron Services for detailed support.

CA00432-S K-type thermocouple module

Thermocouple wire (3m, type K) prepared with welded measurement point to be attached to the sample acceptor block close to the sample acceptance for best possible precision. Comes with fluorine free insulation (glass fibre tube) and ceramics at the measuring end.

CA07120-S Crimp connector for feedthroughs (UHV-side)

- Minimum order quantity: 4 pieces
- Gold-plated copper
- Maximum diameter of wire: 1.3 mm
- Pin diameter: 1.3 – 1.5 mm

PN00480-S Chromel crimp connector for feedthroughs (UHV-side)

PN00478-S Alumel crimp connector for feedthroughs (UHV-side)

Ceramics for manipulator wiring

Ceramics are used to insulate wires where high temperatures do not allow insulation by PTFE or Kapton coating, i.e. usually close to the heater element.

S711002-S ***Ceramic for sample heater wire***

- Minimum order quantity: 75 pieces.
- Outer diameter: 2.0 mm
- Inner diameter: 1.0 mm
- Length: 2.0 mm

S7112-S ***Ceramic for sample heater wire (2 holes)***

- Minimum order quantity: 75 pieces.
- Outer dimensions: 4.2 x 2.3 mm
- Inner diameter: 2x 1.3 mm
- Length: 5.0 mm

CA03643-S ***Ceramic for thermocouple wire (2 holes)***

- Minimum order quantity: 75 pieces.
- Outer diameter: 1.6 mm
- Inner diameter: 2x 0.4 mm
- Length: 3.0 mm

Standard feedthroughs and cables

Overview

	Version	Feedthrough	Cable
For PBN heater (4 pin)	Current (MS circular)	F1004-S	K7812-S
	Obsolete (Fischer)	On request (discontinued)	K781200-S (on request)
For e-beam heater (6 pin)	Current	CA07002-S	PN07207 (e-beam heating) PN07208 (direct heating w. HEAT3 PS) K7812 (direct heating with 12.5 A 750W PS as used for PBN heater)
	Previous (old e-beam)	CA07002-S	PN03982 (e-beam heating) CA09272-S (direct heating)
For HT heater (6 pin)	Current	CA07002-S	PN04350-S
For type K thermocouple	Current (MS circular)	PN06390-S	PN06389-S (Dual)
	Previous (LEMO)	PN05676-S	PN05640-S (Single) PN05641-S (Dual)
	Obsolete (Fischer)	On request (discontinued)	On request (discontinued)

F1004-S 4 pin feedthrough for heater (MS circular, DN16CF)

Used for current versions of PBN heaters. Without plug.

K7812-S PBN heater cable (MS circular)

Suitable for F1004-S 4 pin heater feedthrough. Length: 6 m

K781200-S PBN heater cable (Fischer)

Suitable for F2011-S 4 pin heater feedthrough. Length: 6 m. The (Fisher type) feedthrough is discontinued and available only on request.

CA07002-S 6 pin feedthrough for heater (MIL-C-5015-type, DN16CF)
Used for e-beam heaters and high temperature heaters. Without plug.

F1223-S Right angle adapter DN16CF-DN16CF
Can be used in situations where feedthroughs cannot be mounted directly due to geometrical constraints, SL: 38 mm.

PN03982 E-beam heater cable
Suitable for CA07002-S 6 pin feedthrough, to connect to previous e-beam heater power supply. Length: 8 m.

CA09272-S Direct current heater cable
Suitable for CA07002-S 6 pin feedthrough, for direct current heating option. Length: 8 m

PN07207-S Cable for e-beam/resistive heating with connector for HEAT3 PS

Suitable for CA07002-S 6 pin feedthrough, to connect to current e-beam heater power supply. Length: 7.5 m

PN07208-S Cable for direct current heating with connector for HEAT3 PS

Suitable for F1004-S 4 pin feedthrough, for direct current heating option. Length: 7.5 m

PN04350-S High temperature heater cable

Suitable for CA07002-S 6 pin feedthrough, Length: 8 m

PN06390-S 4 pin feedthrough for thermocouple (MS circular, DN16CF)

Used for current version of type K thermocouples. Without plug.

PN06389-S Thermocouple cable (MS circular)
Suitable for PN06390-S 4 pin feedthrough, type K, length: 6 m.

PN05676-S 4 pin feedthrough for thermocouple (Lemo-type, DN16CF)
Used for previous version of type K thermocouples. Plug included.

Note: F2010-S (Fischer-type) is not available anymore and has been replaced.

PN05641-S Thermocouple cable (LEMO; dual TC)
Suitable for PN05676-S 4 pin thermocouple feedthrough, type K. Length: 6 m. Also available as single TC option (PN05640-S).

Note: Replaces CA03433-S (Fischer type plug) for F2010-S.

Power supplies for manipulator heaters

Other power supplies (more power, higher voltage or current) are available upon request.

PN02985-S ***Power supply 750 W***

- Programmable power supply for rack-mounting (19” x 1U) with integrated RS-232 and RS-485 interface.
- Output: 0-60 V, 0-12.5 A (DC).

PN03157-S ***Power supply 1500 W***

- Programmable power supply for rack-mounting (19” x 1U) with integrated RS-232 and RS-485 interface.
- Output: 0-60 V, 0-25 A (DC).

Liquid nitrogen cooling

F250100-S ***LN_2 cooling accessory kit***

For manipulators with liquid nitrogen cooling, hose diameter 1/8’’ (for example Omniax, Miniax, Transax and HPT).

Contains:

- Dewar
- Spiral tube
- Hose with isolation material

CA00482-S ***VCR gasket***

Copper gasket for in-vacuum nitrogen line connectors. 1/8”. Sealing washer without mounting bracket.

PN06651 ***LN_2 cooling accessory kit***

For manipulators with liquid nitrogen cooling,
inner hose diameter 6 mm (for example PMK).

Contains:

- Dewar flask
- Spiral tube
- Hose with isolation material

Evaporators

EFM Evaporators

Standard crucibles

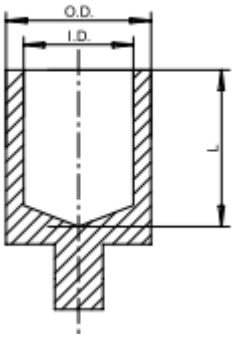

B000425-S	Al_2O_3 small	Capacity 0.06 cc., ID 3.0 mm, O.D. 7.5 mm, L 5.5 mm, T_{max} @ 10E-4 Torr, vapor pressure 1320 °C Material: Mo-liner with aluminium oxide insert
B000426-S	Al_2O_3 medium	Capacity 0.15 cc., ID 5.0 mm, O.D. 9.0 mm, L 8.0 mm, T_{max} @ 10E-4 Torr, vapor pressure 1320 °C Material: Mo-liner with aluminium oxide insert Not suitable for EFM 3T and EFM 3i!
B000427-S	Al_2O_3 large	Capacity 0.28 cc., ID 6.0 mm, O.D. 10.0 mm, L 10.0 mm, T_{max} @ 10E-4 Torr, vapor pressure 1320 °C Material: Mo-liner with aluminium oxide insert Not suitable for EFM 3T and EFM 3i!
B000428-S	Al_2O_3 extra large	Capacity 0.65 cc., ID 10.0 mm, O.D. 11.0 mm, L 13.0 mm, T_{max} @ 10E-4 Torr, vapor pressure 1320 °C Material: Mo-liner with aluminium oxide insert Not suitable for EFM 3T and EFM 3i!
B000429-S	PBN small	Capacity 0.19 cc., ID 4.5 mm, O.D. 7.5 mm, L 7.0 mm, T_{max} @ 10E-4 Torr, vapor pressure 1600 °C Material: Mo-liner with PBN insert and tantalum clip For EFM3T and EFM 3i only!
B000430-S	PBN medium	Capacity 0.19 cc., ID 5.5 mm, O.D. 8.5 mm, L 8.0 mm, T_{max} @ 10E-4 Torr, vapor pressure 1600 °C Material: Mo-liner with PBN insert and tantalum clip Not suitable for EFM 3T and EFM 3i!
B000431-S	PBN large	Capacity 0.6 cc., ID 8.0 mm, O.D. 11.0 mm, L 12.0 mm, T_{max} @ 10E-4 Torr, vapor pressure 1600 °C Material: Mo-liner with PBN insert and tantalum clip Not suitable for EFM 3T and EFM 3i!

B000434-S	Mo small	Capacity 0.075 cc., ID 4.0 mm, O.D. 6.0 mm, L 6.5 mm, T_{max} @ 10E-4 Torr, vapor pressure 2120 °C
B000432-S	Mo medium	Capacity 0.25 cc., ID 6.0 mm, O.D. 8.0 mm, L 9.0 mm, T_{max} @ 10E-4 Torr, vapor pressure 2120 °C
B000433-S	Mo large	Capacity 0.6 cc., ID 8.0 mm, O.D. 10.0 mm, L 12.0 mm, T_{max} @ 10E-4 Torr, vapor pressure 2120 °C Not suitable for EFM 3T and EFM 3i!
B000435-S	Graphite small	Capacity 0.075 cc., ID 4.0 mm, O.D. 6.0 mm, L 6.5 mm, T_{max} @ 10E-4 Torr, vapor pressure 1800 °C
B000436-S	Graphite medium	Capacity 0.125 cc., ID 4.5 mm, O.D. 6.0 mm, L 8.0 mm, T_{max} @ 10E-4 Torr, vapor pressure 1800 °C
B000437-S	Graphite large	Capacity 0.3 cc., ID 6.0 mm, O.D. 8.0 mm, L 9.0 mm, T_{max} @ 10E-4 Torr, vapor pressure 1800 °C Not suitable for EFM 3T and EFM 3i!
B000438-S	Graphite extra large	Capacity 0.7 cc., ID 9.0 mm, O.D. 11.0 mm, L 12.0 mm, T_{max} @ 10E-4 Torr, vapor pressure 1800 °C Not suitable for EFM 3T and EFM 3i!
B000439-S	Tantalum small	Capacity 0.075 cc., ID 4.0 mm, O.D. 6.0 mm, L 6.5 mm, T_{max} @ 10E-4 Torr, vapor pressure 2590 °C
B000440-S	Tantalum medium	Capacity 0.25 cc., ID 6.0 mm, O.D. 8.0 mm, L 9.0 mm, T_{max} @ 10E-4 Torr, vapor pressure 2590 °C
B000441-S	Tantalum large	Capacity 0.6 cc., ID 8.0 mm, O.D. 10.0 mm, L 12.0 mm, T_{max} @ 10E-4 Torr, vapor pressure 2590 °C Not suitable for EFM 3T and EFM 3i!
B000442-S	Stainless steel crucible with nozzle medium	Knudsen like crucible, capacity 0.15 cc, ID 5.0 mm, O.D. 7.0 mm, L 8.0 mm, T_{max} @ 10E-4 Torr, vapor pressure 800 °C
B001258-S	BeO small	Capacity 0.085 cc., ID 4.0 mm, O.D. 8.0 mm, L 7.0 mm, T_{max} @ 10E-4 Torr, vapor pressure 1900 °C Material: Mo-liner with beryllium oxide insert and tantalum clip Max. fill = 1/4 to operate with cold lip Please note: Hazardous good. Transport and export restrictions.
B000443-S	BeO medium	Capacity 0.19 cc., ID 6.0 mm, O.D. 10.0 mm, L 7.0 mm, T_{max} @ 10E-4 Torr, vapor pressure 1900 °C Material: Mo-liner with beryllium oxide insert and tantalum clip Max. fill = 1/4 to operate with cold lip Please note: Hazardous good. Transport and export restrictions. Not suitable for EFM 3T and EFM 3i!
B000445-S	W small	Capacity 0.11 cc., ID 4.0 mm, O.D. 6.0 mm, L 6.5 mm, T_{max} @ 10E-4 Torr, vapor pressure 1300 °C
B000446-S	W medium	Capacity 0.25 cc., ID 6.0 mm, O.D. 8.0 mm, L 9.0 mm, T_{max} @ 10E-4 Torr, vapor pressure 2750 °C
B000447-S	W large	Capacity 0.6 cc., ID 8.0 mm, O.D. 10.0 mm, L 12.0 mm, T_{max} @ 10E-4 Torr, vapor pressure 2750 °C Not suitable for EFM 3T and EFM 3i!

Barrel connectors for crucibles

B000448-S	Mo barrel connector for EFM3, diameter 1.5 mm	suitable for target wires up to 1.5 mm or crucibles, includes molybdenum set screws Not suitable for EFM 3T!
B000449-S	Stainless Steel barrel connector for EFM	suitable for target wires up to 1.5 mm diameter Not suitable for EFM 3T!
B001259-S	EFM barrel connector molybdenum 2.0 mm	suitable for target wires up to 2.0 mm diameter, includes molybdenum set screws Not suitable for EFM 3T!
B001260-S	EFM barrel connector molybdenum 4.0 mm	suitable for target wires up to 4.0 mm diameter, includes molybdenum set screws Not suitable for EFM 3T!
B001261-S	EFM barrel connector molybdenum 6.0 mm	suitable for target wires up to 6.0 mm, includes molybdenum set screws Not suitable for EFM 3T!
B001629-S	Barrel connector molybdenum 1.5 mm for Triple EFM	standard barrel connector for EFM3T, suitable for target wires up to 1.5 mm diameters or crucibles
PN08060-S	Barrel connector molybdenum 2.0 mm for Triple EFM	Special barrel connector for EFM3T, suitable for target wires up to 2.0 mm diameters or crucibles

Spare ceramics for EFM

CA05296-S	Slide bearing ceramics for EFM3T (set of 3)	
CA05297-S	Slide bearing ceramic with Mo rod and connector for EFM3T	
D117510-S	Spare Flux Monitor Ceramics for EFM T3	

Water cooling spare parts for EFM

PN03322-S	T-cross for EFM with quick connectors
PN03321-S	T-cross for EFM
B001257-S	Quick lock/unlock water hose connectors (QWC)

Filaments for EFM

CA09324-S	EFM3 filament with thick wire, 150 µm	Thoriated tungsten filament wire d 0.15 mm Replaces ***B000910-S.*** Suitable for EFM2, EFM3, EFM3s, EFM4, EFM H! Filaments build after mid-2017 will be no longer compatible with NG EFM power supplies built before 2001.	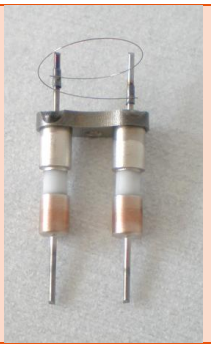
PN08046-S	Filament for EFM 3T with thick wire, 150µm	Wire d 0.15 mm. Two isolated pins. Not compatible with NG EFM power supplies built before 2001.	
B002916-S	Filament for EFM 3T	Wire d 0.125 mm. Two isolated pins. Suitable for serial numbers 0111-2004 and all serial numbers from 0113-2004 onwards.	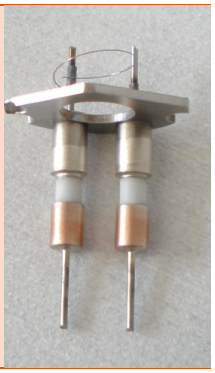
PN00913-S	EFM T3 barrel connector for filament	Barrel connectors for filament, only for EFM 3T (2 pieces).	
PN00558-S	EFM ¾ barrel connector for filament	Barrel connectors for filament, only for EFM ¾ (2 pieces).	

Effusion Cells

Overview

According to the material that is going to be evaporated, one has to choose a suitable

- Source type
- Crucible material and size
- Filament type
- Cooling/ Shutter/ Thermocouple

Choosing the wrong equipment might cause severe damage to the effusion cell. Crucibles of different materials and sizes are available for all the effusion cells mentioned here on request. Replacement filaments available for

onsite replacement are listed below. Please contact Scienta Omicron Service for any further information and for a quotation of any part required.

Explanation of typical source denotation:

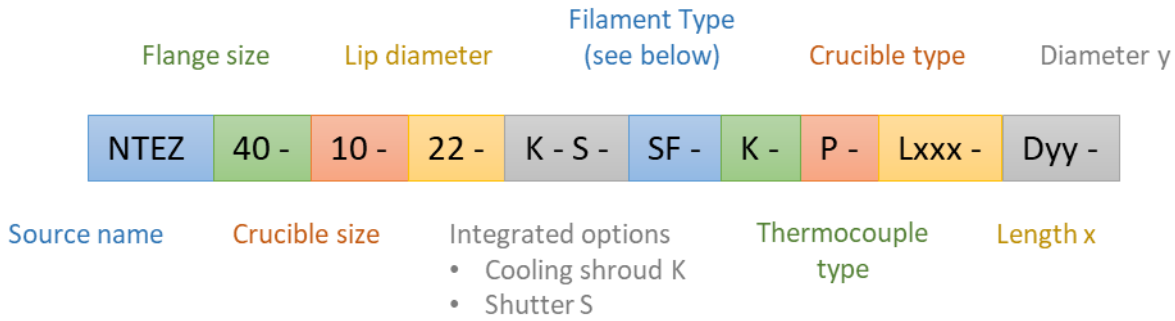

Filament Types:

- SF – Standard Filament – Heats the crucible along its entire length.
- CL – Cold Lip Filament – Leaves the lip cooler (required for Al); comes with additional shielding.
- TF – Tip Filament – Only topmost part is heated; provides maximum temperature gradient between crucible lip and bottom.
- HL – Hot Lip Filament – Provides higher temperature at lip compared to bottom with a single power supply; is wired more densely at the top compared to the bottom.
- DF – Dual Filament – two heaters that can be independently heated with two power supplies; provides all operation possibilities SF, CL, TF and HL.

Cable set for Effusion Cell
For different types of cells/ different power - on request

Spare parts and crucibles

List of effusion cells with temperature range, thermocouple type, filament type and filament options. Available standard crucibles are listed with material and capacities.

WEZ

Description	T range	TC type	Filament	Standard crucible
Standard effusion cell	700-1400 °C	C	Ta filament (HL, CL, DF, TF)	PBN; 2 – 60 cm^3

PEZ

Description	T range	TC type	Filament	Standard crucible
Production effusion cell	200-1400 °C	2x C	Ta wire filament (HL, CL, DF)	PBN; 40 – 1700 cm^3*

*Customized beam shaping crucible inserts available

NTEZ

Description	T range	TC type	Filament	Standard crucible
Low temperature effusion cell	80-1000 °C	K	Ta filament (HL, CL, DF)	PBN; 2 – 200 cm^3

OME

Description	T range	TC type	Filament	Standard crucible
Organic material effusion cell	15-300 °C	K	Thermal conduction cooling (TCC) with encapsulated Ta wire heater	Al_2O_3; 2, 10, 35 cm^3

HTEZ

Description	T range	TC type	Filament	Standard crucible
High temperature effusion cell	Up to 1900 °C	C	W filament	Various Materials; 1.5, 10, 35 cm^3*

*Crucible material affects maximum temperature

HTEZ-W

Description	T range	TC type	Filament	Standard crucible
High temperature effusion cell	Up to 2000 °C	C	Free-standing thick W filament	Various materials; 10 cm^3*

*Crucible material affects maximum temperature

Available Spares:
- W-heating filament for HTEZ-W

HTS

Description	T range	TC type	Filament	Standard crucible
High temperature source	Up to 2000 °C	C	Flat pyrolytic graphite (PG) filament	PG, BeO, PBN, W; wide opening; 5, 25, 200 cm^3

Available Spares:
- Filament set for HTS 40 and HTS 63

HTS-W

Description	T range	TC type	Filament	Standard crucible
High temperature source	Up to 2000 °C	C	Free-standing thick W filament	PG, W; 5, 25, 200 cm^3

Available Spares:
- Filament set for HTS-W 40

OREZ

Description	T range	TC type	Filament	Standard crucible
Oxygen resistant effusion cell	200-1200 °C	K	Ni alloy (Tmax=1000°C) or noble metal alloy (Tmax=1200°C) wire heating filament (SF, HL, CL, DF)	PBN, Al_2O_3, BeO, Ir; 10 - 125 cm^3

Available Spares:
- Additional Pt shielding
- Pt alloy filament
- Dual filament for OREZ
- BeO filament rings

SUKO

Description	T range	TC type	Filament	Standard crucible
Carbon sublimating source	Up to 2300 °C filament temperature	C	High purity graphite filament (completely shielded with PG parts); Water cooled electrical contacts	

Available Spares:
- Filament set for SUKO 40 and SUKO 63

SUKO-D

Description	T range	TC type	Filament	Standard crucible
p-type doping source for III-V MBE	Up to 2300 °C filament temperature	C	High purity graphite filament (completely shielded with PG parts); Water cooled electrical contacts	

Available Spares:
- Filament set for SUKO-D 40

EBV

Horizontally mounted – single pocket. Intended to achieve high growth rates for low vapor pressure materials at high purity

Description	T range	TC type	Filament	Standard crucible
Electron beam evaporator			Short-legged coil of thick W wire, electron emitting filament	PBN; 40, 100 cm^3

Available Spares:
- Evap materials for 100 cc: high purity Si and Ge block
- Recharge pill Si and Ge for ERU (for -R refill unit)
- Set of Si shielding parts for 250/200 – 100 (single cover plates available also)
- Si-crucible liner
- W-filament (set of 5)
- Complete emitter assembly
- Power supply 3, 5 and 10 kW

EBVM

Horizontally mounted – 3, 4, 5 or 6 pockets.

Description	T range	TC type	Filament	Standard crucible
Multi-pocket electron beam evaporator			Short-legged coil of thick W wire, electron emitting filament	OFHC copper; 8, 15 cm^3

Available Spares:
- Mounting frame with slide
- Grounding tool (for EBV also)
- W-filament (set of 5)
- Complete emitter assembly
- Hearth liner; 8 and 15 cm^3 crucibles (Al_2O_3, BeO, Boron Nitride, Mo, W, …)
- Power supply 3, 5 and 10 kW

SUSI (-D)

Description	T range	TC type	Filament	Standard crucible
Si Sublimating (Doping) Source	Up to 1400 °C	C	High purity monocrystalline Si-filament (highly doped Si on request)+ Si Shielding of Fil; Water cooled electrical contacts	

Available Spares:
- Filament set for SUSI 40 and SUSI 63
- Filament set for SUSI 40 and SUSI 63 (As doped)

DECO

Description	T range	TC type	Filament	Standard crucible
GaP decomposition source	Up to 1500 °C	C	Ta wire heating filament	PBN; 10 - 420 cm^3

HABS

Description	T range	TC type	Filament	Standard crucible
Hydrogen atom beam source	Up to 2100 °C		Tungsten Filament	PBN, PG, Al_2O_3; 2 - 200 cm^3

Available accessories:
- Mo-aperture plate
- UHV leak valve (VAT)
- All metal valve
- Gas purifier H2 (O2)

MBE Accessories

Shutter Module for effusion cell

This drive unit for rotary shutter motion provides a soft change between two shutter positions while vibration level is decreased to increase shutter lifetime in UHV.

- Soft acting rotary shutter module (CCW/ CW; fast (0.2)/ slow (1.0))
- Shutter control unit (1, 6, 12 Channel) (not required with Mistral system controller)

BFM – Beam Flux Monitor

In MBE applications, BFMs can be used to measure the flux ratio of atomic or molecular beams from effusion cells to determine growth rates on sample surfaces. Our standard BFM is pin-compatible with ion gauge controllers of the PGC-series from AML.

Available Spares:

- ***CA13778-S Filament Kit***: Twin thoriated iridium filaments – needs compatibility check for specific BFM.
- Pressure gauge controller
- 5 m cable
- 10 m cable

QMB – Film Thickness Monitor

With a Quartz Micro-Balance (QMB), the growth of <1 nm films can be measured in situ to calibrate the flux of effusion cells. Mounted to a linear shift, the flux can be measured directly in front of the sample surface as well as at different positions to determine the uniformity of growth. To minimize temperature effects, the QMB is water-cooled. The flux is determined from the change in natural oscillation frequency of a crystal due to a change of its mass.

Available Spares:

- ***CA12766-S Spare Oscillator package***: 6 MHz Inficon Crystals in AT-cut plano convex design
  Diameter: 14 mm (0,550")
  10 crystal per package, minimum order quantity = 1 package

Cooling water distributor

The MBE Systems LAB 10 and EVO are equipped with cooling-water distributors. These provide cooling-water for MBE equipment where needed and allow for measuring the flow of every single effusion cell, evaporator, (…) if a flowmeter is included.

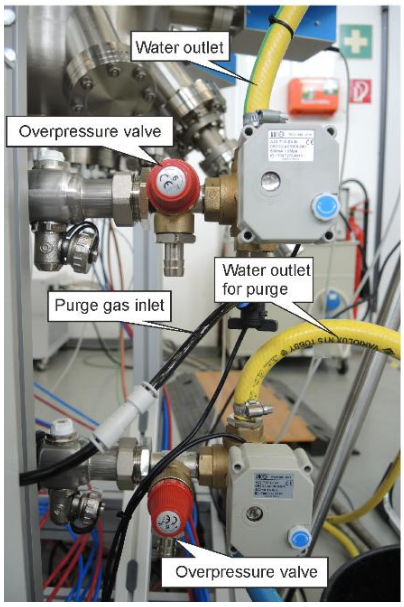

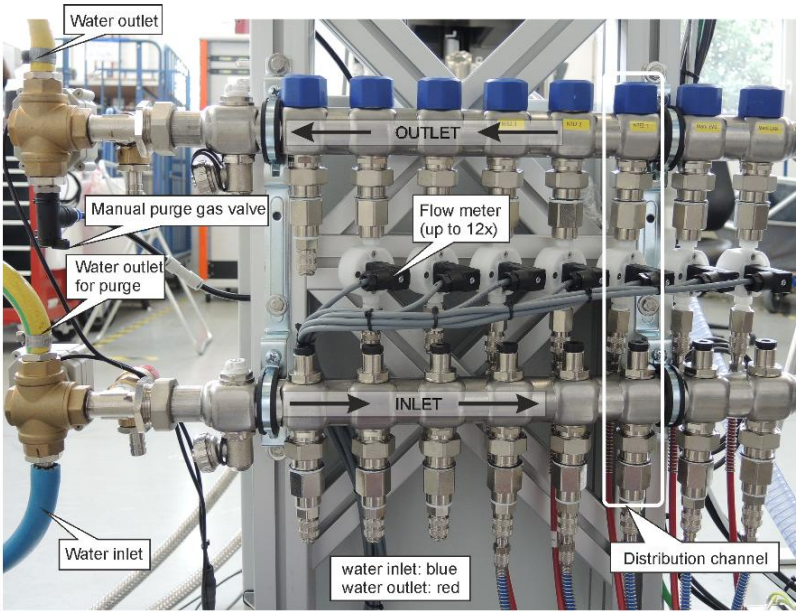

The following spares are available for the 8-fold water distributor ***PN06804*** and 12-fold water distributor ***PN06805***. Additional spares that are not listed here (e.g. polyurethane hose for compressed air, Teflon hose for water cooling and corresponding accessories) are available on request.

PN06797 Coupling socket female
(NW5) G ¼" (inner thread) for distributor, brass nickel-plated, for use with flowmeter.

PN06798 Coupling socket male
(NW5) G ¼" (outer thread) for distributor, brass nickel-plated.

PN05199 Coupling connector 6 mm

NW5 connector to distributor, with bend protection for hose, 6 x 4 mm.

Hose inner diameter: 4 mm
Hose outer diameter: 6 mm

CA11802 Coupling connector 8 mm

NW5 connector to distributor, with bend protection for hose, 6 x 8 mm.

Hose inner diameter: 6 mm
Hose outer diameter: 8 mm

PN06799 Screw-on fitting female

G 1/8” for effusion cell, 6 x 4 mm, Brass nickel-plated.

Inner thread: 1/8”
Hose inner diameter: 4 mm
Hose outer diameter: 6 mm

Ion sources

IS 40 Ion Source

The following spare parts are available for the IS 40 Ion Source:

QIS4001-S ***Cathode for Ion sources IS 40 C1***

QIS4002-S ***Anode for Ion sources IS 40 C1***

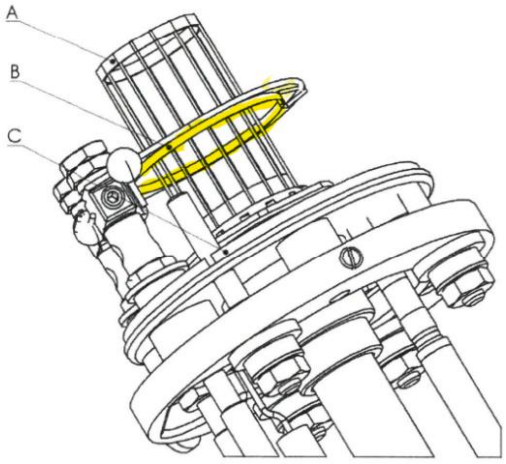

A – anode; B – cathode; C – repeller;

FDG 15 and FDG 150

PN06466-S ***Spare filament for FDG15/150***

An Al gasket is included.

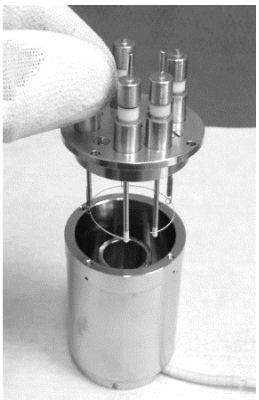

It is important to notice that albeit some settings show a linear behavior of beam current and emission current, the emission limit of 20mA as specified in the test-sheet should not be exceeded to gain an increase in beam current. The corresponding high filament current reduces the filament lifetime significantly.

The maximum filament current is 1.6 A, which only occurs if

- maximum emission current is increased far beyond 20mA
- filament coating is damaged or gone

When working within the default parameter range, the filament current should not exceed 1.4 A.

GCIB

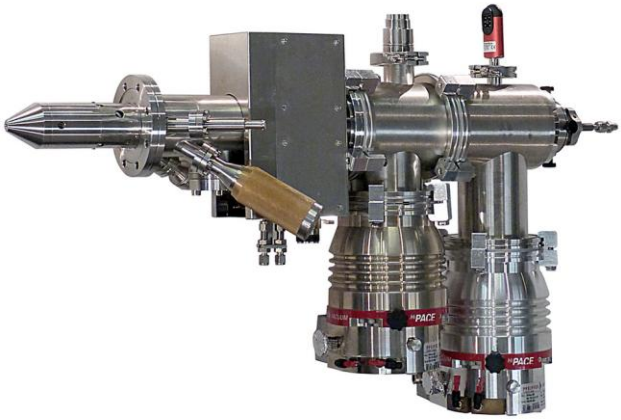

PN06668-S ***Filament assembly for GCIB 10s***

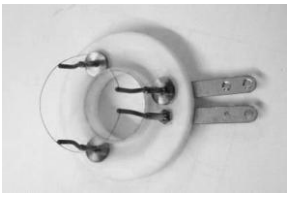

If the ion beam power supply shows >10 V and <0.5 A for the filament, then it is likely that the filament is blown.

Also, if the cold filament shows a resistance different as 0.5 – 0.7 ohms.

In either case the filament should be replaced.

Ion Sputter Gun IG70

PN06556-S ***Replacement Tungsten filament for IG70 (set of 2 filaments)***

For guns from 2020 onwards. Please always specify the serial no. of the gun.

Canion Focused Ion Beam

PN03169-S ***Mini Cartridge including Gallium Source***

Alternatively, a refilling set for the Gallium source is available.

PN03168-S ***Mini Cartridge including Gallium Source and cartridge adapter set***

ISE 5 (discontinued)

Please note: The ISE 5 sputter gun is discontinued. It is replaced by the IS 40 Ion Source. No spare parts are available anymore.

ISE 10 and ISE 100 (discontinued)

Please note: The ISE 10 and ISE 100 sputter guns are discontinued and are replaced by the FDG 15 or FDG 150. Scienta Omicron offers only very limited support for these devices.

FIG05 (discontinued)

Please note: The FIG 05 sputter gun is discontinued. Scienta Omicron offers only limited support for this device. Spare filaments are still available:

PN02362-S ***Filament assembly for FIG-05***

Electron sources and Scanning Electron Microscopes

UHV Gemini

PN04730-S ***TFE filament***

Spare thermal field emitter (TFE) for UHV Gemini.
Technical specifications:
- pre-mounted in housing cartridge.
- W single crystal with ring of ZrO.
- Typical operation temperature: 1800 K.
- Typical lifetime: 3000 +/- 1000 hours
- Typical signs of filament failure: Loss of resolution, unstable extractor current.

Please note: The exchange of the TFE needs to be carried out by qualified service personnel. After mounting and bake-out, the new emitter has to be run up in Service mode and calibration of electron optics needs to be performed, both unavailable in standard user mode. Please request a quote for a respective service visit in addition to the spare part. Typical times required are 2-3 days. Please contact Scienta Omicron Service.

UHV Gemini: old electronics and software

Please note that the old Gemini electronics together with the SEM measurement PC using SmartSEM software kit as distributed with stand-alone UHV Geminis as well as with LT Nanoprobe and NanoSAM systems before 2025 is discontinued. Scienta Omicron only offers very limited support for these electronics. Please contact Scienta Omicron Service for any electronics and SEM PC issue. Repairs are limited by availability of spare parts.

A system suffering from defective Gemini electronics or measurement PC can be upgraded with new Gemini electronics and new SEM software together with a Windows 11 PC.

New electronics and software for UHV Gemini

Users of a stand-alone UHV Gemini or Nanoprobe system can benefit from the new UHV Gemini Electronics and Software Upgrade. It is meant for customers who want to continue using the Gemini for the next years while keeping the extendibility of their system and exploring a new and modern SEM software. The upgrade is also applicable for systems showing a defective Gemini electronics or measurement PC.

The upgrade package includes:
- Gemini control electronics.
- Gemini control panel.
- SEM control software DISS 6.
- Windows 11 PC and a 27" TFT screen.
- Compact 19" electronics rack (height 18 U).
- Cable set, including HV cable and lens cables.
- Ion getter pump controller and cable set.
- Manuals

Technical Specifications:

- Control electronics for SEM column comes with beam current tables customized for Scienta Omicron's UHV Gemini column.
- Control electronics for in-lens secondary-electron detector includes a photomultiplier, with connection cable.
- Control panel provides convenient operation of the SEM column with adjustment knobs for magnification, brightness, contrast, focus, stigmators, image shift, (…).
- Beam voltage (ETH) range: 100V – 30kV.
- SEM control software DISS 6 comes pre-installed and tested on a Windows 11 PC. It includes a data recorder software, a data analysis package, and SU2 configuration and service software.
- For the electronics rack, ground connections and internal tubes for cooling water and pressurized air are pre-installed

For installation Scienta Omicron offers a 3-days visit which also includes customer training. Please contact your local Scienta Omicron Service Office for a quotation.

Restrictions:

For a Gemini used within a NanoSAM Systems, the UHV Gemini Electronics and Software Upgrade leeds to some restrictions. Please note that AES measurements with the Gemini in spot mode are possible using Matrix for E-Spec for spectrum acquisition. The Upgrade Electronics and Software does not provide an interface to Matrix for E-Spec for SAM.

The UHV Gemini Electronics and Software Upgrade does not support SEMPA.

Vortex

Vortex UHV SEM column

Replacement filament cartridges are available on request.

Channeltron-SED for LT Nanoprobe with Vortex column

PN06688-S ***Single channel electron multiplier***

To be mounted on the lN_2 shield of an LT Nanoprobe STM head.

Standard SEM calibration samples

PN01701-S ***SEM high resolution test sample Au on C***

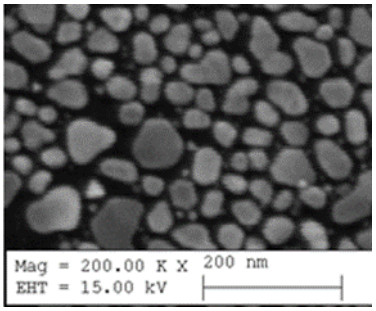

Gold on Carbon, particle size 5 to 150 nm, larger particles in the center of each grid and smaller particles in the edges. The sample is mounted on top of the sample plate.

For room temperature stages. VT version: ***PN01700-S***; LT Nanoprobe version: ***PN04755-S***.

PN01704-S ***SEM calibration test sample***

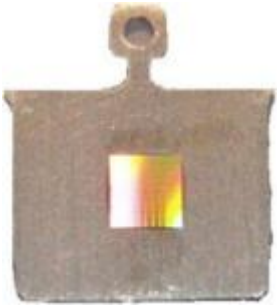

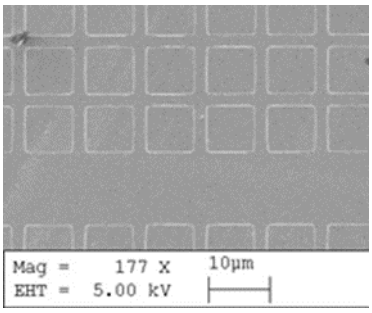

Silicon single crystal 5 mm x 5 mm, squares with a periodicity of 10.00 µm +/- 0.05 µm, width of split-line, appr. 2.0 µm, marker lines with 500 µm distance.

The sample is mounted on top of a standard sample plate. For room temperature stages.
VT version: ***PN01703-S***; LT Nanoprobe version: ***PN04756-S***.

PN00061-S ***Chessy sample plate***

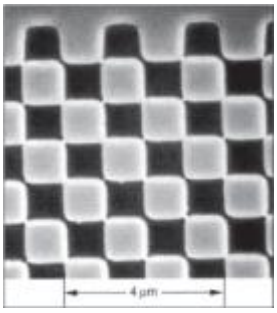

Sample with chessboard structure: gold squares on a silicon substrate. The smallest squares are 1 µm large and create a 10 x 10 µm chessboard. These chessboards in turn are arranged to form a 100 x 100 µm chessboard, and these in turn form a 1 x 1 mm large board. In total 5x5 mm of the sample are filled with squares. The total sample size is around 10 x 10 mm.

This is only the test sample without sample plate.

PN07249-S ***Chessy sample on PEEM sample plate***

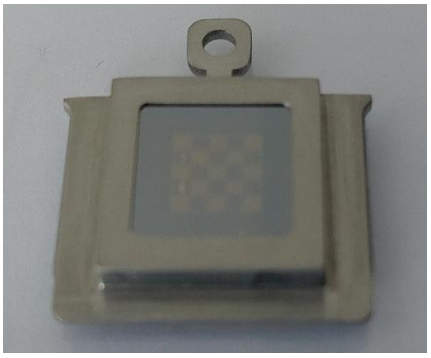

PN00061-S Chessy sample is also available mounted on **CA10726-S** Stainless steel (PEEM) sample plate with a square opening of 9 mm x 9 mm, for real space NanoESCA and TOF measurements. Refer to PEEM sample plates also.

Sample Neutralization

FS40A1 Flood Source

QFS4001-S ***Cathode for flood source FS40A1***

CN10 Charge Neutralizer

Please note: The CN10 Charge Neutralizer was replaced by the FS 40 Flood Source and is no longer produced. Scienta Omicron offers only limited support for this device. The following spare parts are still available:

Q12MFIL-S ***CN10 filament module (BaO)***

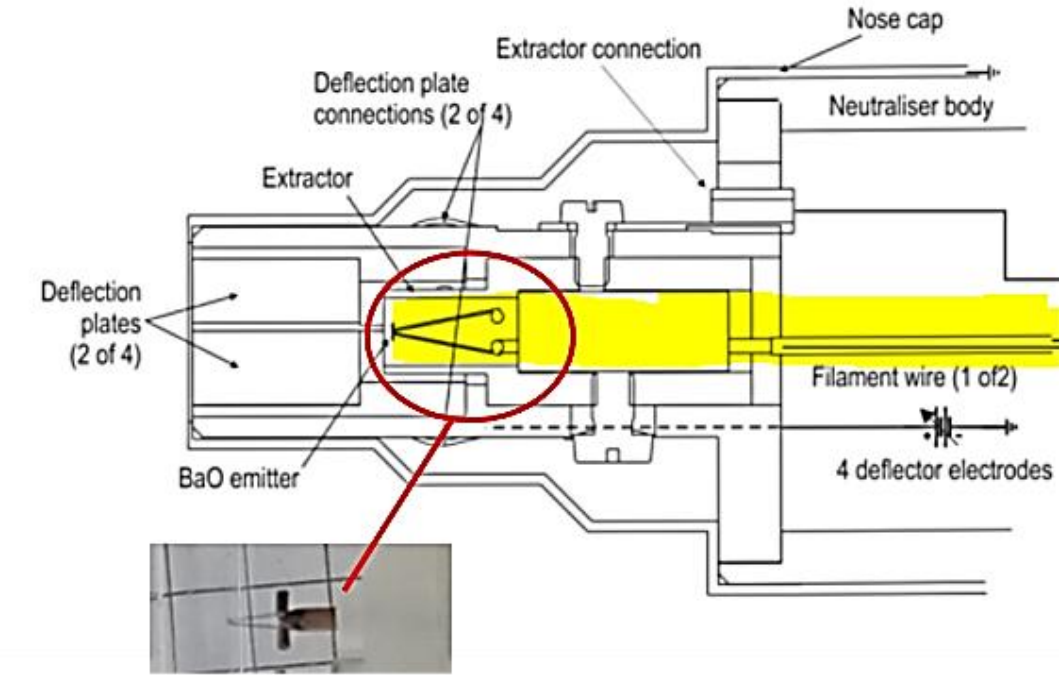

The filament assembly consists of a Barium coated substrate that is directly heated by a tungsten hairpin and mounted on a standard base. The BaO emitter supplies a current densitiy up to 400 nA/mm^2 of electrons. Frequently venting the UHV system reduces the lifetime of a BaO emitter. After venting aswell as for new filaments, the emitter needs to be activated by a certain procedure.

UV/Vis Sources

Hg UV Source

D201000-S ***Replacement light bulb for PEEM HG***

The lifetime of the HBO 103 short arc mercury lamp is at least 300 h. The electrodes burn off with advanced lifetime, resulting in an unstable arc and finally the lamp might not start. The power supply indicates if the lamp is working correctly (green LED).

To replace the HBO lamp, one has to be very cautious since it contains highly poisonous mercury. For details see the additional OSRAM sheet with directions for use of HBO lamps or visit the OSRAM webpage about sustainability and recycling. All HBO lamps are collected by OSRAM's local recycling partners.

HIS13/HIS14 VUV Source

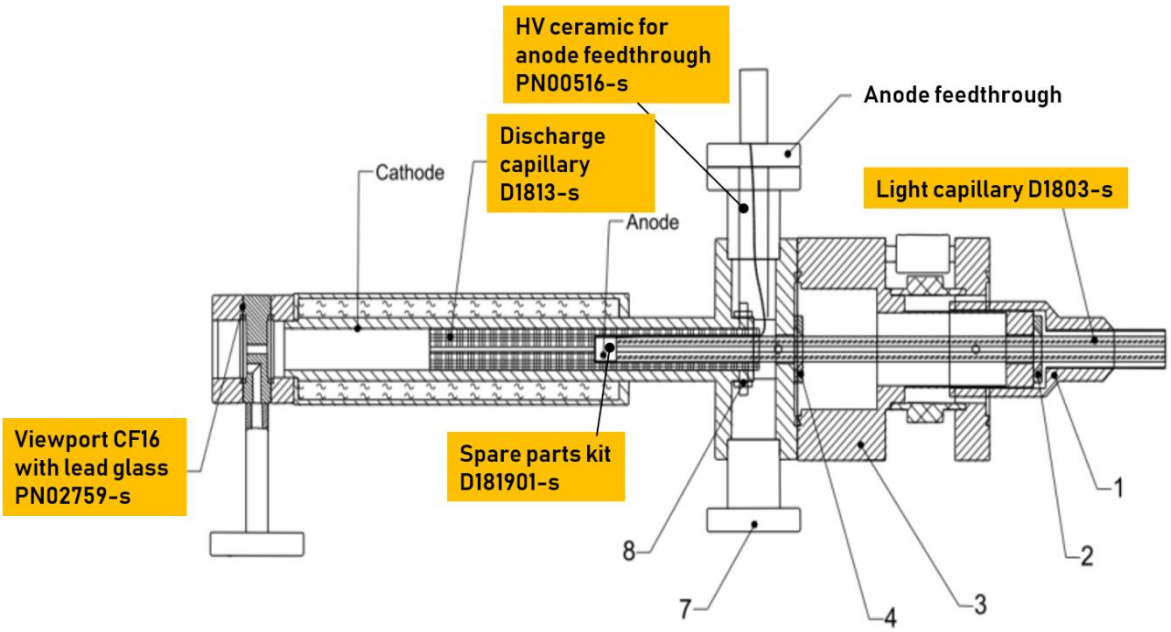

D1803-S ***Light capillary for HIS13/14***

Please specify serial number, insertion depth and inner diameter of the capillary on order. Please also specify if the HIS is operated with old anode (HIS built before 2016, see D181901-S) or new anode (built after 2016, see D7173-S).

D1813-S ***Discharge capillary for HIS13/14***

After a long operational period of the lamp (typically after several thousands of service hours), especially with frequent use of He II or Ly α with high current, the inside of the discharge capillary will be increasingly metallized because of sputtered cathode material. This is indicated by a reduced voltage drop during operation and a significantly reduced light yield.

D181901-S ***Spare parts kit for HIS13/14 (old anode type)***

For HIS manufactured before 2016. Typical lifetime of this anode: 300 h with He I.

The spare parts kit consists of:

- Anode (Tantal, shown in the picture) with connection cable and plug
- HIS O-rings
- Screw set

Please contact your local service team for further information.

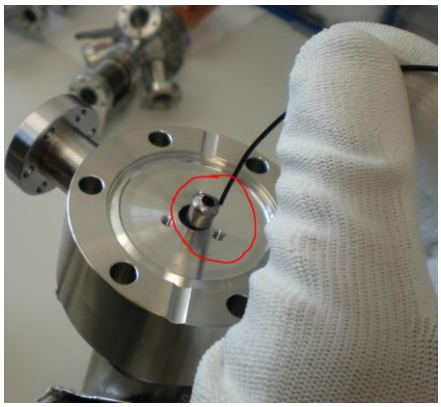

D07173-S ***Spare parts kit for HIS13/14 (new anode type)***

For HIS built after 2016 and HIS already upgraded to new anode type.
Additionally, the kit can be used to upgrade an old anode type HIS to benefit from longer uptimes especially in bright mode. A new (shorter) light capillary needs to be added to the kit in case of an upgrade, to deal with the new dimensions of the upgrade anode. Please contact your local Scienta Omicron service for further information.

The spare parts kit consists of:

- Anode cap HD (shown in the picture) with connection cable and plug
- Spacer ceramic
- HIS O-rings
- Screw set

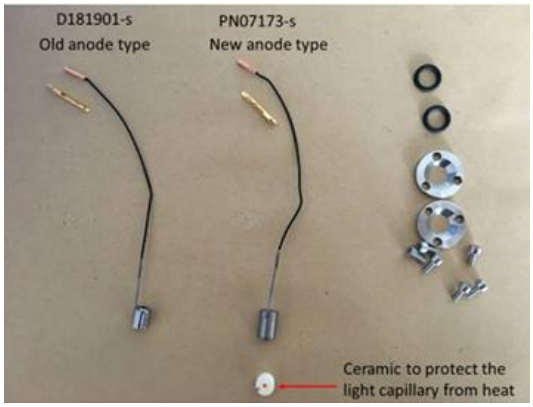

N00516-S ***High voltage ceramics***

For anode feedthrough of HIS13

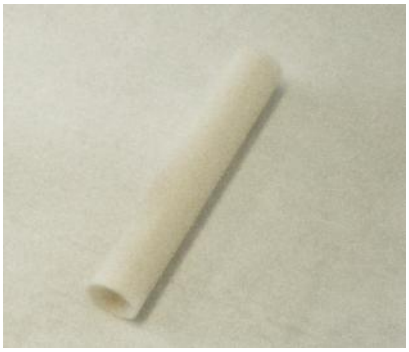

PN02759-S ***Lead glass viewport***

CF16 lead glass window for rear viewport of the His13/14

X-Ray sources

XR6 - X-ray source for NanoESCA

PN08050-S	***Spare anode for XR6***
PN08051-S	***Spare filament for XR6***
CA16143-S	***Filter B-6F-40*** Spare inline filter for XR6. Made of brass. 3/8” Swagelok. Filter element 40µm.
PN07703-S	***Spare filter element kit for XR6*** The kit includes - 1 spare filter element 40µm - 10 gaskets for brass filter housing 6F/ 8F

Electron diffraction

SpectaLEED - LEED/AES, MCPLEED, SPALEED

Please note: The Scienta Omicron SpectaLEED series is discontinued and was replaced by the IntegraLEED series. Scienta Omicron still offers spare parts and further support on the former Scienta Omicron SpectaLEED series. Further, upgrade packages are available. Please contact your local Scienta Omicron Service Team.

The following compatible replacement filaments are still available:

PN06372-S ***Spare LaB_6 filament for Omicron SpectaLEED***

Replaces Q02MFIL-S. Replacement single crystal LaB6 filament. The filament is centered in a Wehnelt cylinder and formatted in UHV.
- Filament current: 2.3 A max.
- Operating current: 1.73 A.

PN06391-S ***Spare thoriated tungsten filament for Scienta Omicron SpectaLEED***

Replaces QIRMFIL-S. Replacement hairpin shape 1 % Thoriated Tungsten filament (0.005”). The filament is centered in a Wehnelt cylinder and formatted in UHV.
- Filament current: 2.35 A max.
- Operating current: 2.1 A.

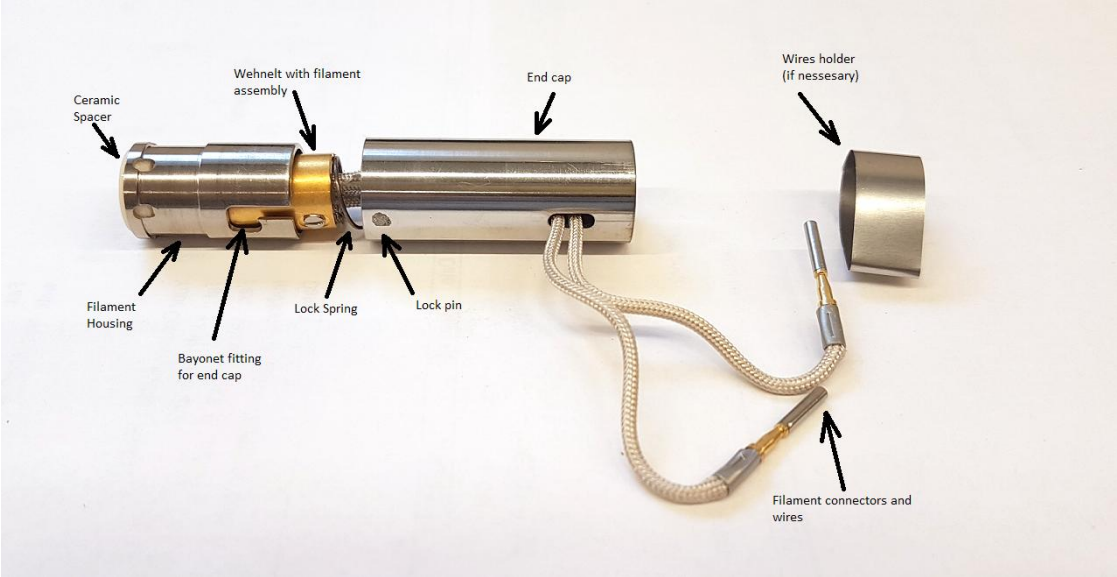

PN06391-S

Please note that those filaments are not compatible with SpectaLEED optics built before September 1989. They are compatible with all standard SpectaLEEDs built after September 1989, although the dimensions are slightly different. The image below shows an old filament housing for reference. The filaments should be formatted in UHV before first use. The new filament comes with instructions on removing the old filament and installing the new one.

QIRMFIL-S

Additionally, for SpectaLEED optics built after 1989, Scienta Omicron still offers more spare parts and factory repairs also. Please ask your local Scienta Omicron Service Team about

- Replacement luminescent LEED screen.
- LEED screen recoating.
- Grids cleaning and recoating.
- Replacement LEED/ AES electronics including new cable set.
- Exchange of LEED electron gun.

New LEED series: IntegraLEED

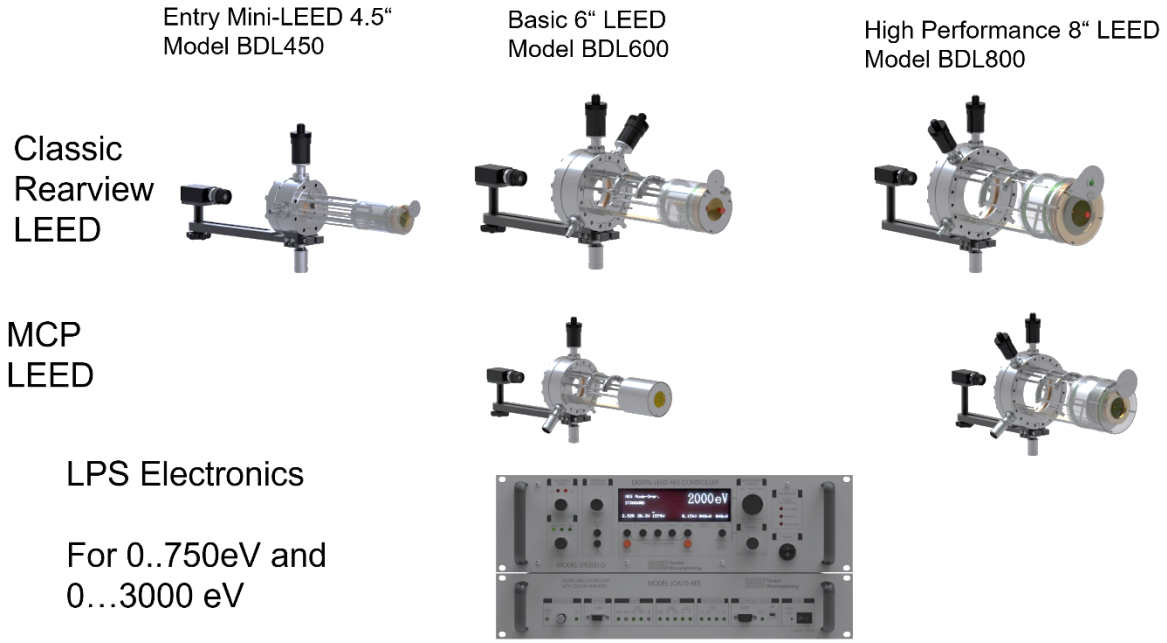

Spare LEED filaments for IntegraLEED optics:

PN06828-S ***Replacement standard tungsten hairpin filament for IntegraLEED***

Replacement hairpin shape 1 % Thoriated Tungsten filament (0.006"). The filament is centered in a Wehnelt cylinder and formatted in UHV.
- Filament current: 2.95 A max.
- Operating current: 2.5 A.

PN06829-S ***Replacement single crystal LaB6 filament for IntegraLEED***

Replacement single crystal LaB6 filament. The filament is centered in a Wehnelt cylinder.
- Filament current: 2.12 A max.
- Operating current: 1.73 A.

Spare grids:

SPC-IL-GR-450 ***Spare grid for IntegraLEED BDL450IR, 1pc***

SPC-IL-GR-600 ***Spare grid for IntegraLEED BDL600IR, 1pc***

SPC-IL-GR-800 ***Spare grid for IntegraLEED BDL800IR, 1pc***

Spare luminescent LEED screens:

Replacement luminescent screen on ITO coated hemispherical glass display with optical quality BK7 glass, mounted on a stainless-steel ring.

PN07644-S ***Spare luminescent screen for Scienta Omicron SpectaLEED***

SPC-IL-LSC-450 ***Spare luminescent screen for IntegraLEED BDL450IR***

SPC-IL-LSC-600 ***Spare luminescent screen for IntegraLEED BDL600IR***

SPC-IL-LSC-800 ***Spare luminescent screen for IntegraLEED BDL800IR***

SPC-IL-LSC-MCP ***Spare luminescent screen for MCP-LEED BDL800IR-MCP***

SPC-IL-LSC-MCP ***Spare luminescent screen for MCP-LEED BDL600IR-MCP***

LEED and AES power supplies

Scienta Omicron can supply with different models of spare electronics for both, the discontinued Scienta Omicron SpectaLEED series and the new IntegraLEED series. Please find an overview of available spare parts in the catalogue and please contact your local Scienta Omicron service team for any further information.

PN06105 ***Digital LEED power supply for IntegraLEED, 0-750 V***

For LEED operation only. Digital power supply (0-750 V) with USB interface and PC control software for Windows 7. True primary beam current and total emission measurements. Automatic start-up and shut down, 10 memory settings including standby and outgassing mode with timer, constant beam current mode controlled by filament current or Wehnelt voltage. All cables are included.

PN07285 ***Digital LEED power supply for SpectaLEED, 0-750 V***

For LEED operation only. Digital power supply (0 - 750 V) with USB interface and PC control software for Windows 10/11. Compatible with all Scienta Omicron SpectaLEED optics. True primary beam current and total emission measurements. Automatic start-up and shut down, 10 memory settings including standby and outgassing mode with timer, constant beam current mode controlled by filament current or Wehnelt voltage. All cables are included with fittings to Scienta Omicron SpectaLEED optics.

PN06106 ***Digital LEED power supply for IntegraLEED, 0-3000 V***

For LEED and Auger Electron Spectroscopy (AES) operation. Digital LEED-AES power supply (0 - 3.2 kV) with USB interface and PC control software for Windows 10/11. True primary beam current and total emission measurements. Automatic start-up and shut down, 10 memory settings including outgassing with timer, automatic switch from LEED to AES, constant beam current mode. All cables are included.

PN07390 ***Digital LEED power supply for SpectaLEED optics, 0-3000 V***

For LEED and Auger Electron Spectroscopy (AES) operation. Digital LEED-AES power supply (0 - 3 kV) with USB interface and PC control software for Windows 10/11. Compatible with all Scienta Omicron SpectaLEED optics. True primary beam current and total emission measurements. Automatic start-up and shut down, 10 memory settings including standby and outgassing with timer, automatic switch from LEED to AES, constant beam current mode. All cables are included with fittings to Scienta Omicron SpectaLEED optics.

PN06107 ***Digital AES controller for IntegraLEED***

Required for Auger Electron Spectroscopy (AES). Digital AES controller with lock-in amplifier, AES high-voltage ramp board 0 - 2.0 kV with precision sinewave oscillator (0.5 - 20 Vpk-pk) and AES software. Serial RS232 or USB communication to PC. High Auger signal sensitivity based on integrated band-pass filter and pre-amplifier (0.05% of monolayer for Ag peak 351 - 356 eV). All cables are included.

PN07649 ***Digital AES controller for SpectaLEED***

Required for Auger Electron Spectroscopy (AES). Digital AES controller with lock-in amplifier, AES high voltage ramp board 0 - 2.0 kV with precision sinewave oscillator (0.5 - 20 Vpk-pk) and AES software. Serial RS232 or USB communication to PC. High Auger signal sensitivity based on integrated band-pass filter and pre-amplifier (0.05 % of monolayer for Ag peak 351 - 356 eV). All cables are included with fittings to Scienta Omicron SpectaLEED optics.

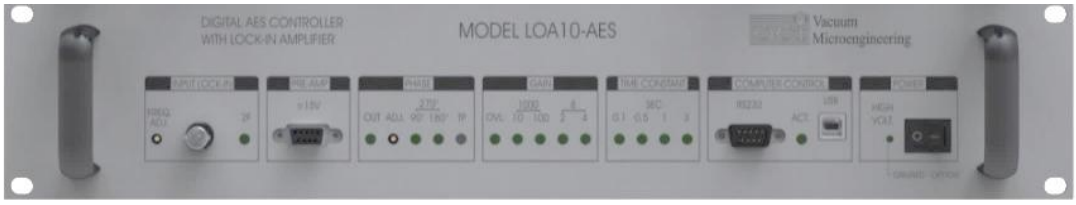

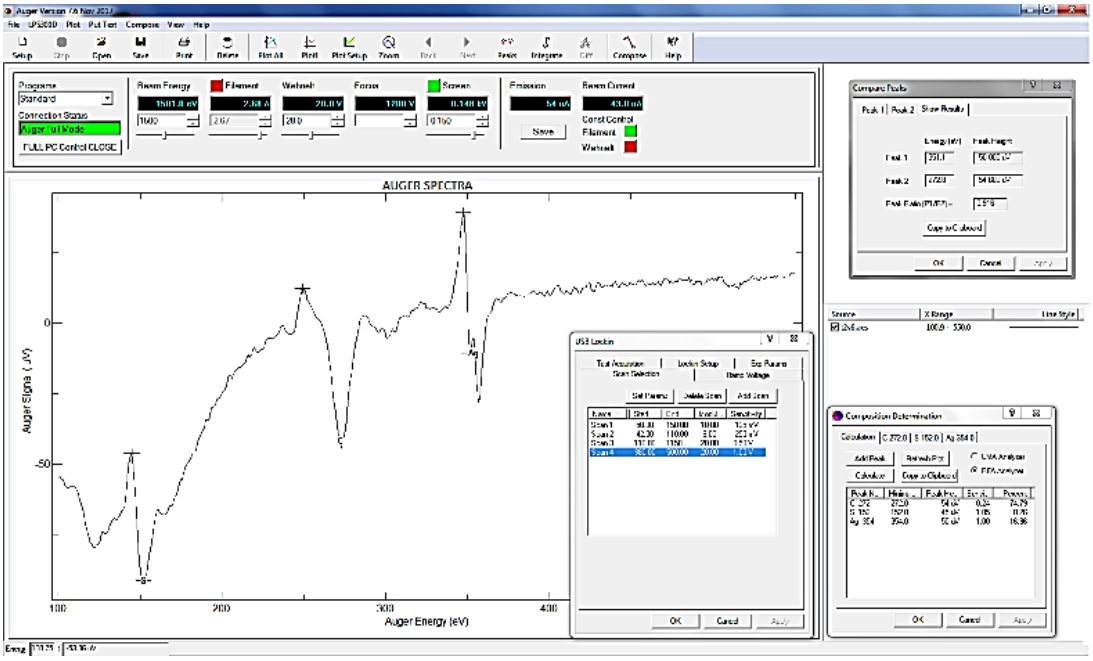

LEED software/camera packages

PN06109 ***Basic LEED pattern measurement package***

Basic LEED pattern measurements and analysis software and hardware for Windows 10/11 including:

-12-bit colour high performance video CCD camera with sensitivity control and USB3 interface;

-1/3” CCD sensor size, image size: 1.3 MP (1288 x 964), 3.75 um pixel size, CS-mount lenses, linear full well 9000e, dynamic range: 59 dB;

-Automatic LEED pattern acquisition;

-Flange Mounting kit with ambient light cover and cables.

PN07599 Full LEED pattern measurements and analysis software package

Full version of LEED pattern measurements and analysis software and hardware for Windows 10/11 including:

-12-bit colour or black and white high performance video CCD camera with sensitivity control;

- 1/3” CCD sensor size, 1.3 MP (1288 x 964) image size, 3.75 um pixel size, CS-mount lenses, linear full well 9000e-, dynamic range: 59 dB;
- Flange mounting kit with ambient light cover and cables.

Software features:

- Automatic LEED pattern acquisition;
- Automatic I-V analysis with spot tracking;
- Automatic I-T analysis;
- Automatic spot profile analysis.

SPL-L-SW-AD Advanced LEED pattern measurements and analysis software package

Advanced LEED pattern measurements and analysis software with hardware for Windows 10 including:

-14-bit colour or black and white high performance scientific grade CCD camera with sensitivity control and USB 3 interface: 2/3" CCD sensor size and 1.4 MP resolution (1384 x 1032), 6.45 um pixel size, C-mount lenses, linear full well 22,000e-, extremely low noise, dynamic range: 68 dB

- Flange mounting kit with ambient light cover and cables.

Software features:

- Automatic LEED pattern acquisition;
- Automatic I-V analysis with spot tracking;
- Automatic I-T analysis;
- Automatic spot profile analysis.

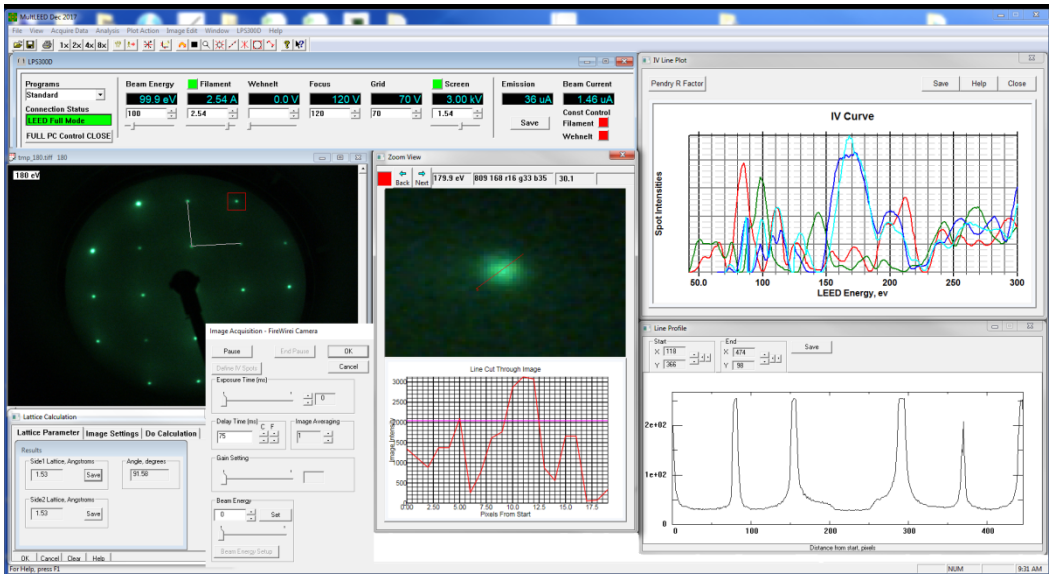

Analysers and Detectors

This chapter covers only a very limited selection of the spare parts for analyzers and detectors available from Scienta Omicron. Please contact Scienta Omicron Services for specific spare part inquiries.

HiPP

PN07954-S ***SiN window assembly for HiPP Lab***

The set includes:
- a silicon nitride window with a square opening of 10 x 10 mm^2 glued to
- a pressure cone frame
- a 14 x 1 o-ring to mount the frame on the pressure cone
- a 62 x 2 o-ring for the pressure cone
- 4x screws and washer for the frame

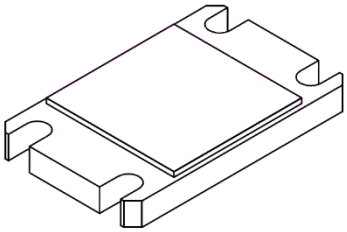

PEEM

D203301-S ***Double multi-channel plate module***

Spare multi-double channel plate module for PEEM CP20AD and PEEM IEF only.

PEEM sample plates

Type A, round, open sample area 5 mm

Type B, round, open sample area 8 mm

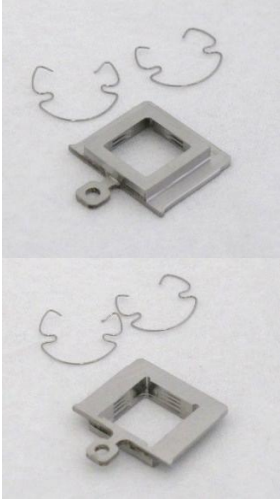

Type C, square, open sample area 9 x 9 mm

Available materials: Mo = Molybdenum
SS = Stainless steel

PEEM sample plates
Suitable for PEEM and NanoESCA systems.

Single		Set of 5	
D2011-S	Mo, Type A	***B002773-S***	Mo, Type A
D201101-S	Mo, Type B	***B002774-S***	Mo, Type B
CA10727-S	Mo, Type C	***PN06228-S***	Mo, Type C
D2012-S	SS, Type A	***B002775-S***	SS, Type A
D201201-S	SS, Type B	***B002776-S***	SS, Type B
CA10726-S	SS, Type C	***CA12452-S***	SS, Type C

PN02893-S ***Set of 5 sample clips for PEEM sample plates***
It fits all types of PEEM sample plates.

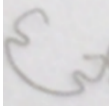

SPLEED for SEMPA

SPLEED detector for SEMPA in combination with UHV Gemini.

PN03108-S ***Spare Channeltron for one SEMPA channel***

SPLEED detector spare Channeltron pre-mounted in Channeltron housing.

It is recommended to replace at least the two Channeltrons placed opposite each other, preferably all four together to ensure similar performance. Please refer to the technical reference manual of your device for replacement instructions.

Test Samples

For PES

PN07247-S Test Sample Ag (111) on PEEM sample plate

Reference sample for PES. This specimen consists of an Ag (111) single crystal with a diameter of 10.00 mm, thickness of 1.00 mm, surface roughness < 0,01 µm and an orientation accuracy of <0.1°. It is delivered in a fitting PEEM sample plate, cylindric cap, molybdenum, window 8 mm (**D201101-S**). The surface can be cleaned by an adequate sputter/annealing cycle. In photoemission it can be used to check the Fermi edge resolution and the momentum space projection thanks to its very clear band-structure.

Picture represents test samples in PEEM sample plate D201101-S.
Please consider the height of 3 mm of the sample surface with respect to the sample plate.

PN07248-S Test Sample Ag (poly) on PEEM sample plate

Reference sample for PES. This specimen consists of an Ag poly-crystal with a diameter of 10.00 mm, thickness of 1.00 mm and is delivered in a PEEM sample plate, cylindric cap, molybdenum, opening 8 mm (**D201101-S**). The surface can be cleaned by an adequate sputter/annealing cycle. In photoemission it can be used to check the Fermi edge resolution. Micro ARPES can be performed on differently orientated domains of the poly-crystal which makes it a nice demonstration sample for the NanoESCA in real- and momentum space.

PN07303-S Test Sample Au (111) on PEEM sample plate

Reference sample for PES. This specimen consists of an Au (111) single crystal with a diameter of 10.00 mm, thickness of 1.00 mm, surface roughness < 0,01 µm and an orientation accuracy of < 2°. It is delivered in a fitting PEEM sample plate, cylindric cap, molybdenum, opening 8 mm (D201101-S). The surface can be cleaned by an adequate sputter/annealing cycle. In photoemission it can be used to check the Fermi edge resolution and the momentum space projection thanks to its very clear band-structure.

For XPS

PN07489-S Test Sample Ag (poly) on stainless steel sample plate

Polycrystalline reference sample for XPS (3D spectra of Ag L_α). The reference sample is delivered on a Scienta Omicron standard stainless steel sample plate.

Upgrade Packages

Mistral Upgrade Package

Mistral graphical user interface for systems with existing Scienta Omicron Mains/ System Controller V3/ V4/ V5

Features:

System Overview with all valves and pump stages for an easy-to-handle UHV system

- Easy to use **Touch-screen control** for all pumps and valves
- Control of a programmed **system bake-out** sequence
- **Temperature read-out** for the manipulator

Safety management with integrated interlocks that allows for

- Keeping vacuum in case of electrical breakdown
- Power supplies for sensitive components are turned off in case of critical pressure drop

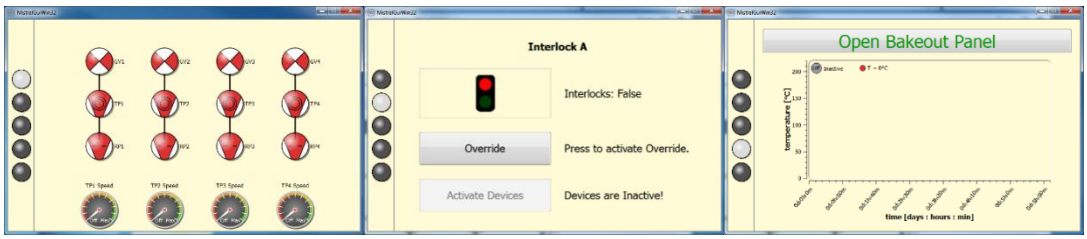

Includes a set of customized adapter cables to connect the existing system control cables in the system rack.

Technical Data:

The kit includes a 3HE rack unit with all control logic to replace the existing system controller logic as well as a 7" touch-screen computer interface to the control system that can be mounted in a 4HE rack space.

- Up to 4 turbomolecular pumps with gate valve control
- Up to 2 mains interlock channels
- Up to 2 bakeout zone inputs (type-K thermocouple)
- Up to 4 rotary pump control channels
- Up to 8 supplementary potential free relay outputs for additional interlock devices

Any additional customization of the Mistral control system to make it compatible with bespoke or non-standard features of the existing system need to be quoted separately and are not included in this package. For a customized offer for a specific existing system please contact SO Service with project number.

Summary of Mistral Upgrade Package

Part Numbers: PN06508 (for SC5); PN06199 (for SC 3/ 4)

Parts included:

- User panel
- Customized set of cables

Limitations:

- bespoke or non-standard features

Any additional customization of the Mistral control system to make it compatible with bespoke or non-standard features of the existing system need to be quoted separately and are not included in this package.

Upgrade Packages for Scienta Omicron Manipulator Heaters

PBN Sample Heater Upgrade Package

For Standard Scienta Omicron Manipulators

This package is designed to **upgrade the discontinued tungsten wire sample heater S7106**, which was supplied with **Scienta Omicron manipulators**, with the current resistive sample heater solution: The coplanar Porolytic Boron Nitride heater element offers great uniformity, high durability and is easy to replace. It can be operated up to a maximum heating power of 100 W (3 A), allowing typical sample temperatures of up to 1370 K (up to 1100 K with optional lN_2 cooling).

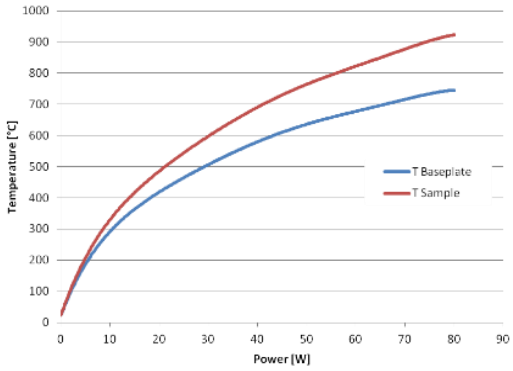

Benefits:

- Maximum sample temperature: 900°C
- High mechanical stability
- Minimum system downtime in case of on-site upgrade.

The package contains all necessary parts for implementation. In most cases, the manipulator can be upgraded on-site by our skilled Scienta Omicron service personnel. Please contact your local Scienta Omicron representative for more information: https://www.scientaomicron.com/en/contact-us

Part number: PN06739-S

Parts included:

- Pre-assembled PBN sample heater module
- Support arm for old manipulator versions
- Internal wiring material for sample heater
- Thermocouple with wiring material
- Spare ceramics for cables and sample heater mount

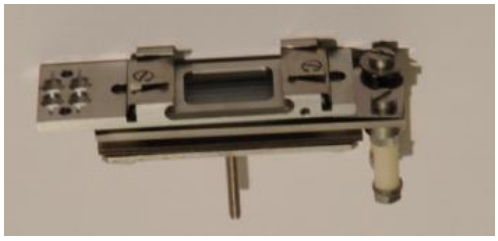

Prerequisites:

Applicable to standard Scienta Omicron manipulators with

- Tungsten wire heater facility, other PBN heater facility or e-beam heater facility.
- No cooling or LN_2 cooling (no He-cooling)
- Only one sample stage
- Only one (primary) rotational axis
- Up to one DH brush
- Scienta Omicron standard sample plates

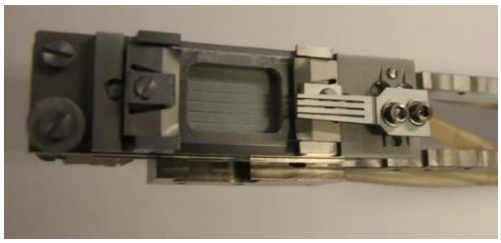

For all other cases, or if you are not sure whether your manipulator fulfils these requirements, please don't hesitate to contact us.

E-Beam Heater Upgrade Packge, High Temperature Version

For Standard Scienta Omicron Manipulators

Scienta Omicron manipulators can easily be upgraded with a high-temperature heater stage (HTHS) to let your system benefit from higher accessible maximum sample temperatures compared to a standard PBN heater. The HTHS allows continuous heating of samples up to 1670 K (1400 °C). Containing all required parts, the package comes pre-assembled for easy on-site implementation.

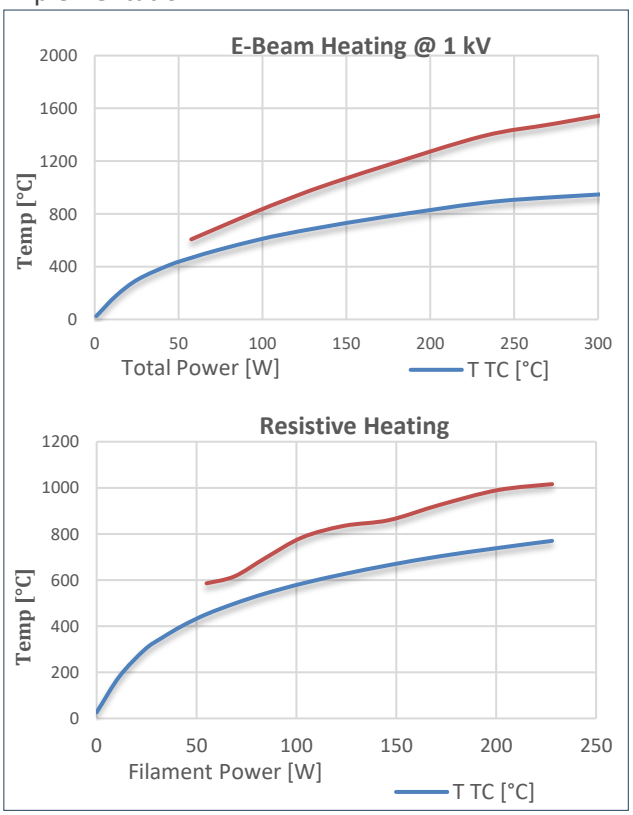

Heater stage temperature vs. heating power for resistive and e-beam heating, typical diagram.

Technical Specifications:

- **W-Filament; Max I_{Fil} = 10 A.**
- **Max. sample temperature.**
- **Higher heating rates in EBH mode; sample acceptor stays on ground potential while heater filament floats on negative HV.**
- **RH mode (250 W) for better control at low temperatures.**
- **Sample acceptor made from Molybenum and multi-layer radiation shield made of Tantalum foil.**
- **Direct current heating (DH) in conjunction with SO DH sample plates.**
- **Dual mode power supply: RH mode with PID control loop for filament current and EBH mode with PID control loop for HV.**

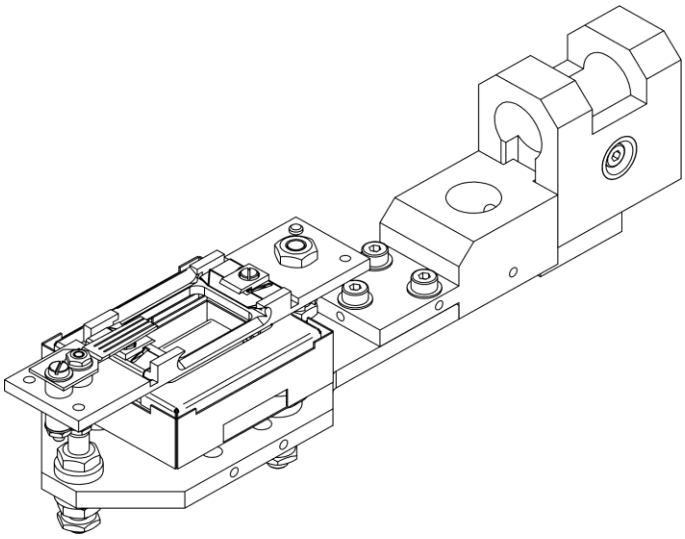

Summary High Temperature Heater Upgrade PN07422-S

Parts included:

- Heater stage, in-vacuum cables and ceramics (Orientation of DH brush needs to be specified with order)
- 6 pin and 4 pin feedthrough for EBH, RH and DH, crimp connectors
- High voltage power supply for EBH and RH; cable set for heater stage
- 4 pin feedthrough for thermocouple, in-vacuum TC module, cable

Prerequisites:

- SO manipulator with rotary drive shaft of 9.5 mm in diameter
- No LN2 or lHe cooling • Only one (primary) rotational axis
- SO standard sample plates

Options:

- LN2 cooling – for details contact SO Service
- Power supply for direct heating

High Temperature Heater Stage Upgrade Package

For Standard Scienta Omicron Manipulators

Scienta Omicron manipulators can easily be upgraded with a high-temperature heater stage (HTHS) to let your system benefit from higher accessible maximum sample temperatures compared to a standard PBN heater. The HTHS allows continuous heating of samples up to 1670 K (1400 °C). Containing all required parts, the package comes pre-assembled for easy on-site implementation.

Technical Specifications:

- **Sample acceptor made from Molybdenum and multi-layer radiation shield made of Tantalum foil.**
- **W-Filament; max. filament power 250 W (10 A, 25 V).**
- **Up to 1400 °C/1670 K sample temperature my means of radiation.**
- **Sample is grounded.**
- **Direct current heating (DH) in conjunction with SO's DH sample plates.**
- **Temperature measurement with thermocouple type K.**
- **Standard HTHS easily upgraded to HTHS for radiative or e-beam heating.**

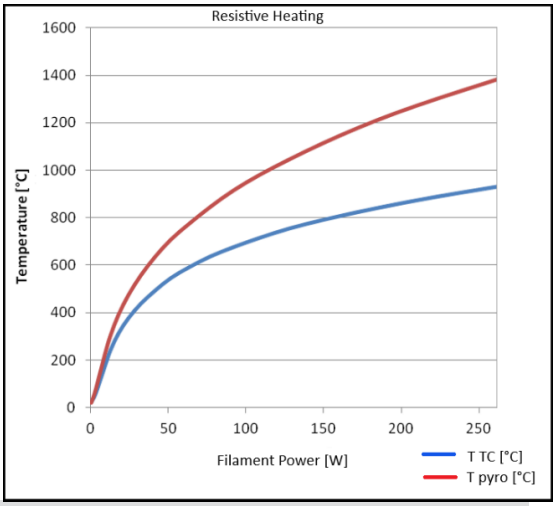

Heater stage temperature vs heating power for resistive heating, typical diagram.

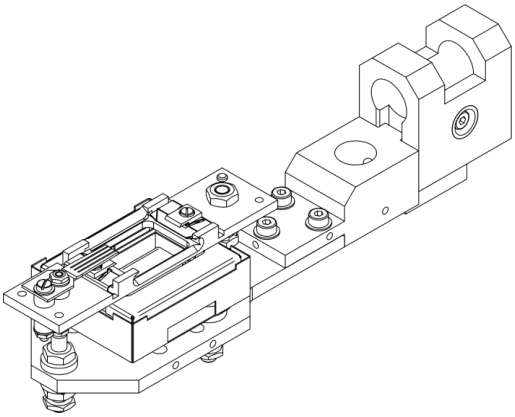

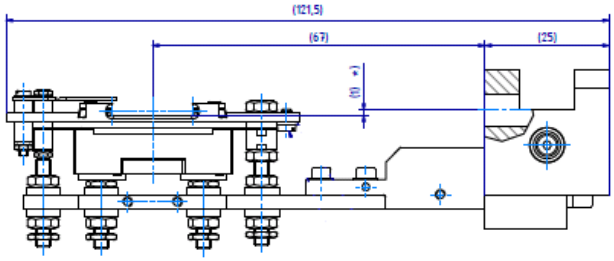

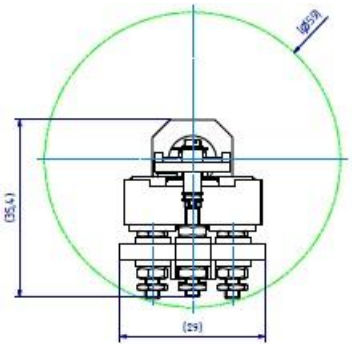

Please contact your local Scienta Omicron representative for more information.

Summary High Temperature Heater Upgrade

Part number:

- PN08017-S

Parts included:

- Heater stage, in-vacuum cables and ceramics (Orientation of DH brush needs to be specified with order).
- 6 pin feedthrough for RH and DH, crimp connectors.
- 4 pin feedthrough for thermocouple, in-vacuum TC module, crimp connectors for TC.
- Cable set for heater stage.

Options:

- Laboratory power supply for radiative and direct heating.
- LN2 cooling – for details contact SO service.

Prerequisites:

- SO manipulator with rotary drive shaft of 9.5mm in diameter.
- No LN2 cooling or lHe cooling.
- Only one (primary) rotational axis.
- SO standard sample plates.

Upgrade Packages for Scienta Omicron SpectaLEED

LEED Spot Analysis Upgrade for Scienta Omicron SpectaLEED Optics

Features:

This upgrade package contains a new digital LEED power supply and a 12-bit colour high-performance video CMOS camera. A software package for quantitative surface structure determination and for I-V, I-t and spot profile analysis is included.

The digital LEED controller provides outputs for the electron gun, grids and screen for a primary beam in the kinetic energy range of 0 - 750 eV. It includes advanced features as automatic start-up and shut down, 10 memory settings, a standby and an outgassing mode with timer.

A flange mounting kit for the camera and cables, compatible for SpectaLEED optics, are also included.

The software package includes:

- Integrated image acquisition and beam energy control on regular and zoomed images
- Measurements on “live” or “saved” images
- Lattice constant calculations
- Spot intensity profile with fine adjustment
- Manual and automatic I-V, I-t and spot profile measurements
- Subtraction and addition of images

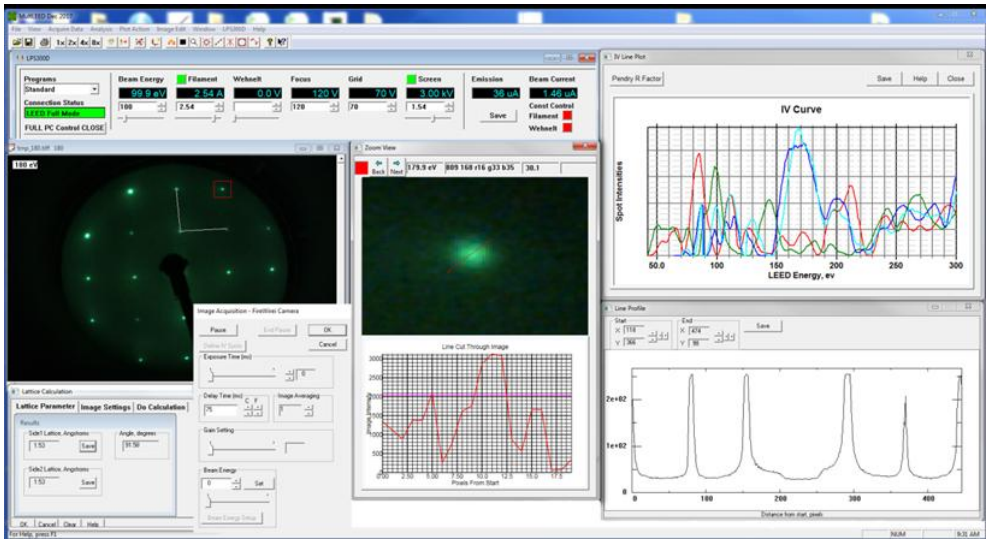

Summary LEED Spot Analysis Upgrade

Parts included:

- LEED controller with USB interface and PC Control software for Windows 10/11
- Data acquisition and analysis software, compatible with Windows 10/11
- 12-bit colour high-performance video CMOS camera
- Cables with fittings to Omicron LEED optics

Prerequisites:

- Scienta Omicron SpectaLEED optics

Options:

- Additional software packages on request. Please ask SO Service for additional information.

High Sensitivity Auger Upgrade for Scienta Omicron SpectaLEED Optics

Features:

This upgrade package contains two controllers and a modern data acquisition software for Auger measurements. It includes a software package for LEED pattern analysis as well as a 12-bit colour high-performance CMOS camera.

The digital LEED-AES controller provides outputs for the electron gun, grids and screen (or MCP) for a primary beam in the range of 0 – 3000 eV kinetic energy. It includes advanced features as automatic start-up and shut down, 10 memory settings, a standby and an outgassing mode with timer.

The digital AES controller includes a lock-in-amplifier, and additional electronics based on an integrated band pass filter and a preamplifier for high sensitivity AES measurements.

Both controllers can be operated by a Windows 10/11 compatible software via USB interface.

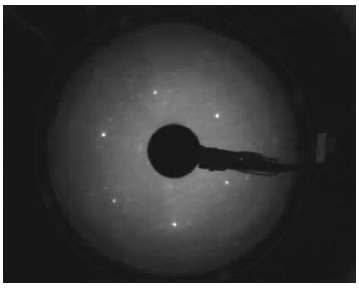

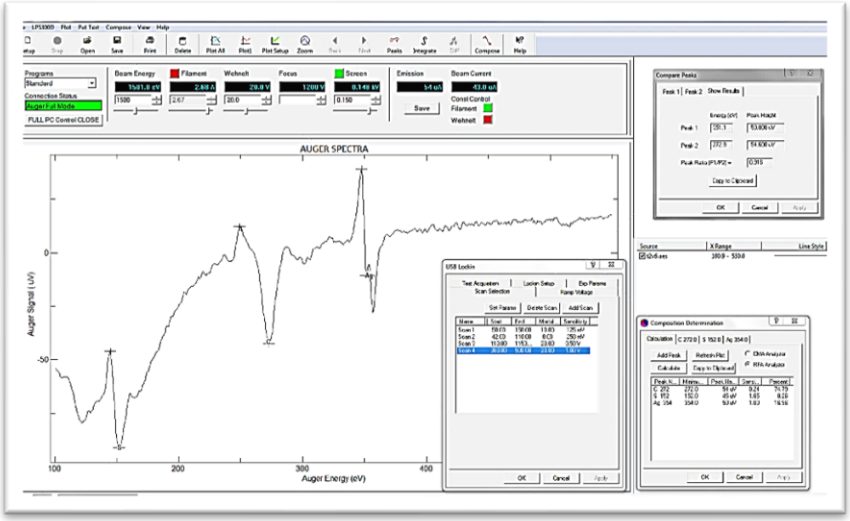

Summary of High Sensitivity Auger Upgrade

Parts included:

- LEED-AES controller
- Digital AES controller with lock-in amplifier
- Data acquisition and analysis software, compatible with Windows 10/11
- 12-bit colour high-performance video CMOS camera
- Cables with fittings to Omicron LEED optics, if necessary

Prerequisites:

- Scienta Omicron SpectaLEED optics.

Options:

- Selection of software packages on request. Please contact SO Service for additional information.

UHV GEMINI Electronics and Software Upgrade Package

Give your UHV Gemini a second life and upgrade with the latest electronics and SEM software!

Experience the future of Scanning Electron Microscopy (SEM) with our state-of-the-art upgrade solution. We offer a comprehensive upgrade that brings your existing system up to the latest technological standards.

Key Features:

- **Stable, Low Noise Electronics:** Benefit from stable and low noise electronics for precise and reliable results.
- **State-of-the-Art Technology with Long-Term Support:** Our solution is cutting-edge and provides long-term support.
- **Windows 11 PC:** Integrate a powerful Windows 11 PC for enhanced user experience.
- **Control panel:** User-friendly, ergonomically designed control panel for easy control of the most important microscope parameters
- **Extended Scan Parameters:** Flexibility in imaging with scan parameters ranging from 10 ns to 500 ms.
- **Counter Inputs:** Expand your system with new components thanks to versatile counter inputs.
- **Sustainability:** Contribute to sustainability by upgrading instead of scrapping.

Why upgrade?

With our UHV Gemini electronics upgrade, you not only gain improved performance and usability but also assurance that your system is future-proof.

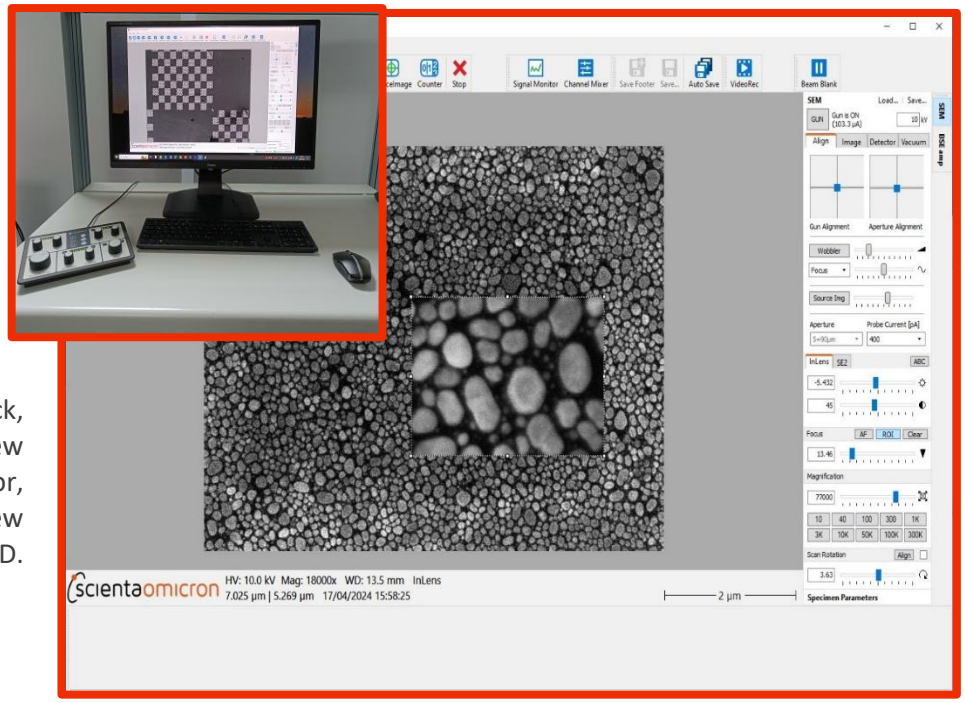

Summary

Part no. PN07977-S

Parts included:

Gemini electronics, rack, Windows 11 PC with new software, 27-inch TFT monitor, control panel, manuals, new photomultiplier for In-lens SED.

Prerequisites:

UHV Gemini system, Nanoprobe system.

Limitations:

- No communication with matrix for e-spec, therefore limited use for NanoSAM systems. Auger Electron Spectroscopy will be applicable.
- SEMPA on request only.

Options:

Mistral upgrade, on request. Please see extra flyer: Mistral graphical user interface for systems with existing Scienta Omicron Mains/ System Controller V3/ V4/ V5.