Spare Parts Catalogue SPM

V3.4



German Headquarters:

Scienta Omicron GmbH

Limburger Str. 75

65232 Taunusstein, Germany

Tel.: +49(0) 61 28 / 987-0

E-Mail: services@scientaomicron.com

scientaomicron

Preface

This document is intended to provide at a glance information on the most commonly used spare parts and consumables for Scienta Omicron SPM heads and their frequently used components. The catalogue does not offer a complete list of everything that is available. The customer is encouraged to contact Scienta Omicron Services whenever looking for an item not listed in the catalogue.

Disclaimer

All information given in this document is subject to change without notice. This document has been compiled carefully but mistakes cannot be excluded. No guarantee can therefore be given for the accuracy of the information contained in this document.

Contents

Contents **2**

Sample Plates **4**

Standard Sample Plates 4

Standard Sample Plates and parts for DIY assembling 5

Direct current heating sample plate 6

Sample plate for NaCl crystal 7

Sample plate for Cross Sectional STM (X-STM) 8

Sample Plates for TRIBUS SPM Head 10

Temperature Variation Sample Plate and Accessories 10

Sample Plates for VT DRH Instruments (“double decker”) 13

Sample Plates for VT XA Instruments 18

Spare Kit Sets for VT Sample Plates 19

Sample Plates for LT STM 21

Sample Plates for Fermi SPM 23

Sample Plates for LT Nanoprobe 23

Test Samples **26**

Tools 27

Probes and Probe-Carriers **28**

TRIBUS SPM Head 28

STM 1, AFM/STM 29

VT STM, LT STM 31

VT AFM 34

Fermi SPM 37

LT Nanoprobe 39

Tesla JT SPM 40

QPLUS® Sensors 40

Sample Plates

A simple categorization of sample plates is difficult. Since most sample plates can be used in more than one instrument, listing the sample plates “by instrument” would lead to duplication and render the maintenance of this document almost impossible. An attempt is made to distinguish between “standard sample plates” which fit into most instruments, and “specialty sample plates” that only fit a small range of instruments.
Please find “☺ Suitable” or “😐 Not suitable” information for part numbers.

When choosing a sample plate always make sure that it is actual compatible with your instrument!

Standard Sample Plates

Basic sample plates made from different materials

PN07176-S ***Stainless steel sample plates (set of 5) – weight 2.2 g per plate***
PN07178-S ***Molybdenum sample plate (3 off) – weight: 2.8 g***
PN07177-S ***Tantalum sample plate (1 off) – weight: 4.6 g***

☺ Suitable for practically all of our instruments (except Cryo STM/SFM/SXM)



PN07500-S ***Sample plate with clamping foils, VT/LT (stainless steel)***
PN07501-S ***Sample plate with clamping foils, VT/LT (molybdenum)***

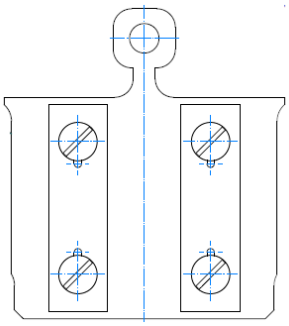

☺ Suitable for most of our instruments (except Tribus SPM/Cryo STM/SFM/SXM)

😐 Not suitable for Tribus SPM, Cryo STM, Cryo SFM, Cryo SXM

S221501-S Tantalum sample plate with window (1 off)

☺ Suitable for most of our instruments (except Tribus SPM/Cryo STM/SFM/SXM)

😐 Not suitable for Tribus SPM, Cryo STM, Cryo SFM, Cryo SXM



Window size: 7x4 mm.

Standard Sample Plates and parts for DIY assembly

The following sample plates with threaded holes and parts can be useful to realize a simple clamping sample plate.

PN04155-S Molybdenum base plate of VT sample plates (set of 2) Contains 2x S2207.

☺ Suitable for the VT AFM and VT STM instruments as spare part for “double decker” cooling/heating sample plates

☺ Suitable for most of our instruments as base plate for simple clamping (except Tribus SPM/Cryo STM/SFM/SXM)😐 Not suitable for Tribus SPM, Cryo STM, Cryo SFM, Cryo SXM



PN04169-S Molybdenum base plate for direct heating sample plate (set of 2) Contains 2x S2182.

☺ Suitable for instruments that work with the “single decker” direct heating sample plate (AFM/STM, STM 1, LT STM, Micro STM, VT STM XA, VT AFM XA, Fermi SPM…)

😐 Not suitable for Tribus SPM, Cryo STM, Cryo SFM, Cryo SXM



Parts for sample clamping:

R213007-S	***Molybdenum stud M1,2 x 2,5 (Minimum order quantity: 5 pieces)***
S2186-S	***Molybdenum stud M1.2x5mm (Minimum order quantity: 10 pieces)***
PN04156-S	***Molybdenum Nuts for Omicron-sample-plates (set of 20)***
S2402-S	***Sample clamping foil small holes, mat. Molybdenum (Minimum order quantity: 10 pieces)*** 
PN04151-S	***Set of clamping-foils for DH-sample-plates (Minimum order quantity: 10 pieces)*** 

Direct current heating sample plate

S218201-S ***Direct current heating sample plate***

☺ Suitable for STM 1, UHV AFM/STM, LT STM, Micro STM, VT STM XA, VT AFM XA, Fermi SPM

😐 Not suitable for Tribus SPM, Cryo STM, Cryo SFM, Cryo SXM and standard VT STM / AFM with double-decker sample plates

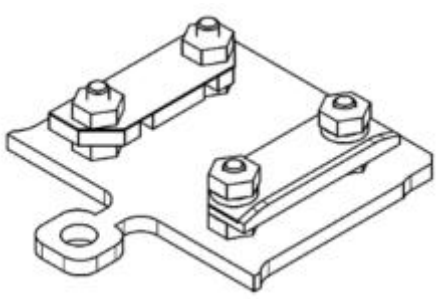



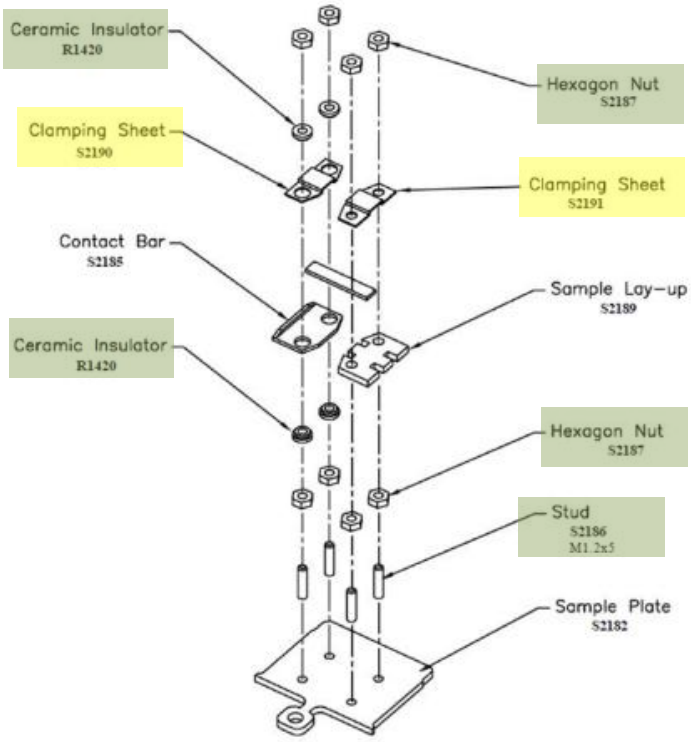

Available accessory kits:

R191410-S ***Spares kit type 1 for direct heating sample plate. contains: 4x stud (S2186); 8 x nut (S2187); 4 x ceramic bush (R1420)***

PN04151-S ***Set of clamping-foils for DH-sample-plates. Contains 2x clamping sheet (S2190); 2x clamping sheet (S2191). (Minimum order quantity : 10 pieces)***

Sample plate for NaCl crystal

PN05063-S ***Sample plate for NaCl crystal***

☺ Suitable for STM 1, UHV AFM/STM, LT STM, Micro STM, VT STM XA, VT AFM XA, Fermi SPM,
LT Nano

😐 Not suitable for Tribus SPM, Cryo STM, Cryo SFM, Cryo SXM and standard VT STM / AFM with double-decker sample plates

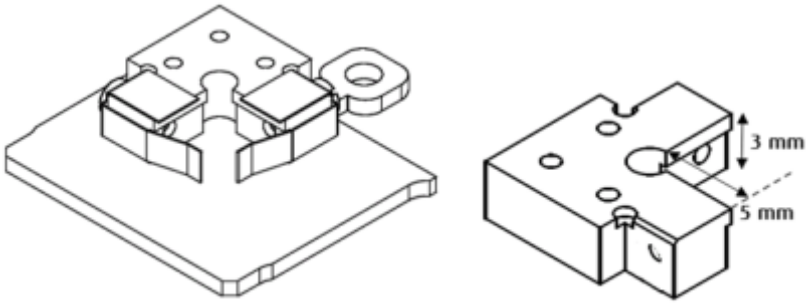

This sample holder can be used to hold salt crystals used for standard performance measurements. The crystal is held in place with side-mounted springs. Accidential dropping of the crystal into the instrument is prevented by two thin metal sheets slightly covering the surface on two sides. The total height of the sample plate is only 4.1 mm. This sample plate contains stainless steel parts and should therefore only be heated to moderate temperatures.

Ideal sample size: 5 mm x 5 mm and 3 mm in height (compare to drawing on the right)

Sample plate for Cross Sectional STM (X-STM)

R216213-S ***Sample plate for Cross Sectional STM v. A (X-STM)***

R216539-S ***Sample plate for Cross Sectional STM v. B (X-STM)***

☺ Suitable for STM 1, UHV AFM/STM, LT STM **without** 4 Contact Option, Micro STM, VT STM XA, VT AFM XA, Fermi SPM

😐 Not suitable for Tribus SPM, LT STM **with** 4 Contact option, Cryo STM, Cryo SFM, Cryo SXM and standard VT STM / AFM with double-decker sample plates

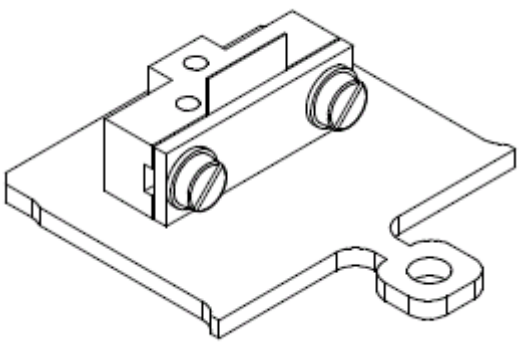

A

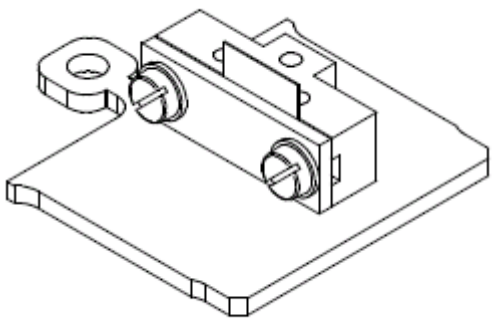

B

This sample holder can be used to hold a sample slab for cleaving it in-UHV. In order to safely clamp the sample and especially avoid the sample falling out of the sample holder when cooled down to 77K or 5K, we suggest soldering the sample to the mini-vice with Indium (or anything similar) before inserting it into UHV.

Ideal sample size: 4 mm x 9 mm and 0.1 mm in thickness.

Sample Plates for TRIBUS SPM Head

Temperature Variation Sample Plate and Accessories

PN07187-S Temperature Variation Sample Plate (TVS Plate), Tribus SPM Head

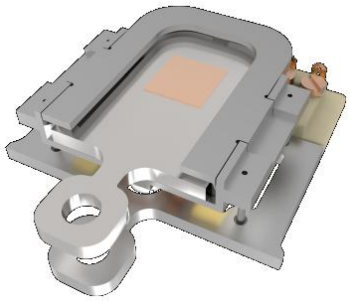

PN07188-S Sample plate for TVS plate (SPTVS), material: stainless steel, set of five
PN07189-S Sample plate for TVS plate (SPTVS), material: molybdenum, set of three
PN07319-S Sample plate for TVS plate (SPTVS), material: tantalum, set of three



PN07190-S Sample plate for TVS plate – single metal crystals holder (SPTVS-SMC) (material: Molybdenum) set of 3



PN07191-S Transfer Plate for SPTVS (Molybdenum), Tribus SPM Head

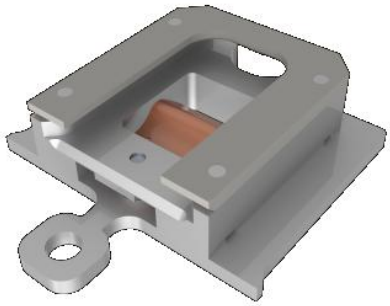

PN07192-S ***Sample plate with clamping foils, Tribus SPM Head (material: stainless steel)***
PN07193-S ***Sample plate with clamping foils, Tribus SPM Head (material: molybdenum)***
PN07186-S ***Sample plate with clamping foils, Tribus SPM Head (material: non-magenetic)***

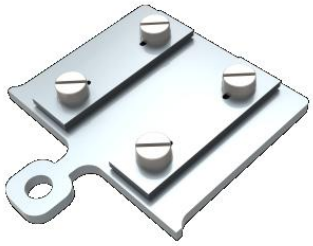

PN07185-S ***Direct Current sample plate, e.g. for Si samples, (material: Molybdenum)***

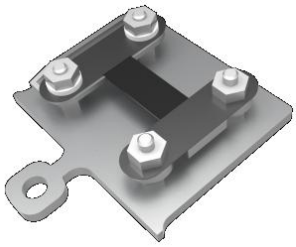

PN07184-S ***Sample plate for metal crystals, Tribus SPM Head (material: Molybdenum)***

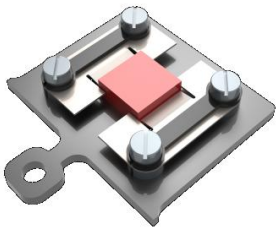

(Crystal not included in delivery)

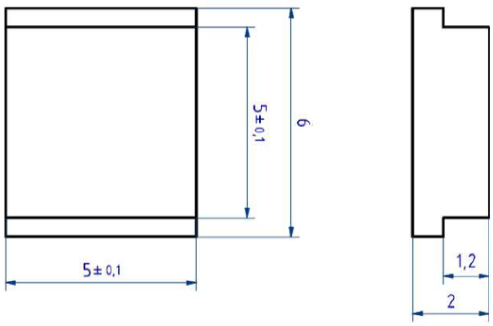

The sample plate is optimized for single crystal geometry as shown in the figure above.

PN07183-S ***Sample plate with 10 electrical contacts, Tribus SPM Heads non magnetic (Tmax=450°C)***

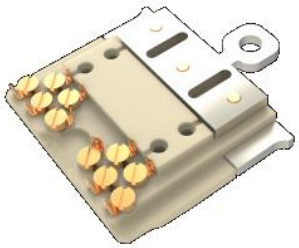

PN07182-S ***Sample plate with 4 electrical contacts, Tribus SPM Head non magnetic (Tmax=450°C)***

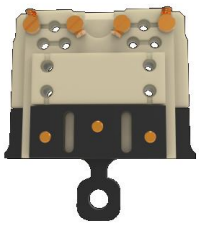

PN07180-S ***Sample plate for NaCl crystal, Tribus SPM Head***
PN07181-S ***Sample plate for NaCl crystal, Tribus SPM Head (Non Magnetic)***



PN07633-S ***Cleaving Sample Plate for TRIBUS***

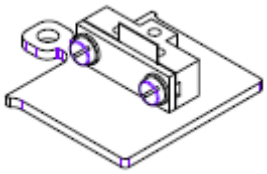

Spare Kit Sets for Tribus SPM Sample Plates

PN07320 ***Base Plate for DH Sample Plate, Set of 2***

Sample Plates for VT DRH Instruments (“double decker”)

B001388-S ***Sample plate for direct current heating for VT***

☺ Suitable for VT AFM and VT STM accepting double decker sample plates

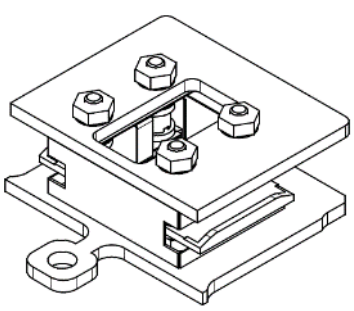

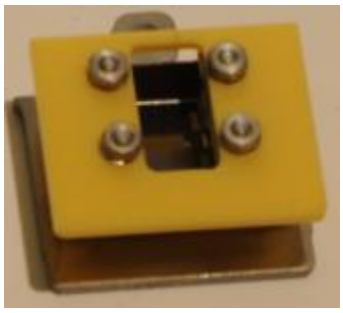

Includes an additional metal coated ceramic plate R192031-S. The metal coated ceramic plate is used in electron spectroscopy applications to avoid a charge up of the ceramic

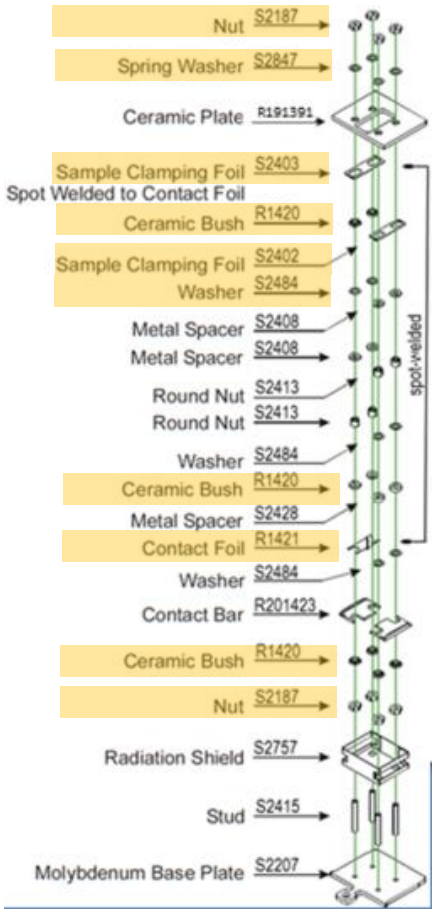

Top Plate:

For spectroscopy applications we recommend metal coated plates (R192031-S)

For prolonged high temperature applications Al_2O_3 plates are recommended (CA02109-S/ CA06702-S = metal coated)

Available accessory kits:

PN04147-S ***Set of accessories for VT-sample-plates. Contains 10x Washer (S2406); 10x Nuts (S2187); 10x Ceramic bush (R1420); 4x Clamp foil (S2402); 4x Clamp foil (S2403);***
2x Contact foil (R1421); 50x Spring washer (S2847)

B001387-S Sample plate for radiative heating for VT

☺ Suitable for VT AFM and VT STM accepting double decker sample plates

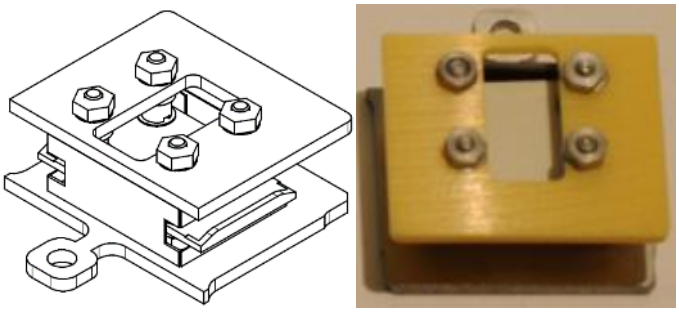

Includes an additional metal coated ceramic plate R192031-S. The metal coated ceramic plate is used in electron spectroscopy applications to avoid a charge up of the ceramic

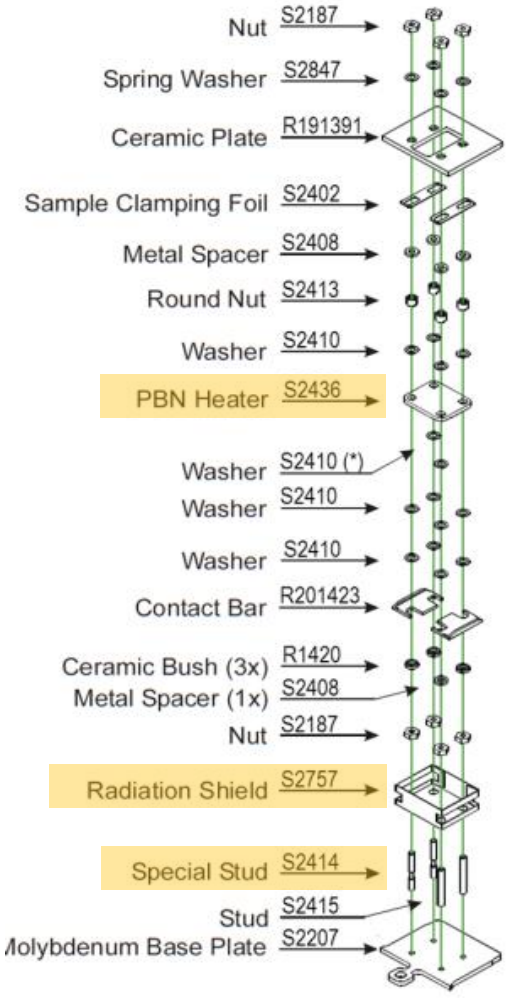

Top Plate:

For spectroscopy applications we recommend metal coated plates (R192031-S)

For prolonged high temperature applications Al_2O_3 plates are recommended (CA02109-S/ CA06702-S = metal coated)

Available accessory kits:

PN04149-S ***Set of accessories for VT-RH-sample plates. Contains 1x PBN heater (s2436); 1x Radiation shield (S2757); 2x Special stud (S2414)***

B001396-S Cooling sample plate for VT

☺ Suitable for VT AFM and VT STM accepting double decker sample plates.

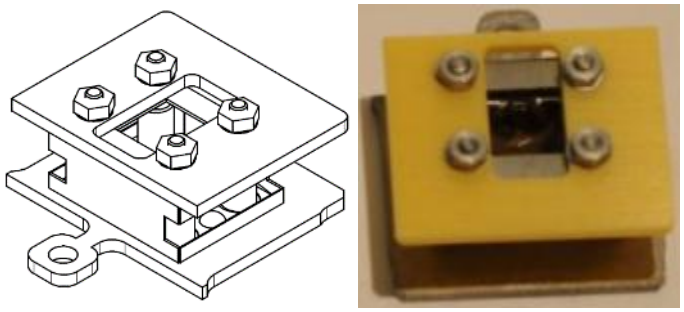

Includes an additional metal coated ceramic plate R192031-S. The metal coated ceramic plate is used in electron spectroscopy applications to avoid a charge up of the ceramic.

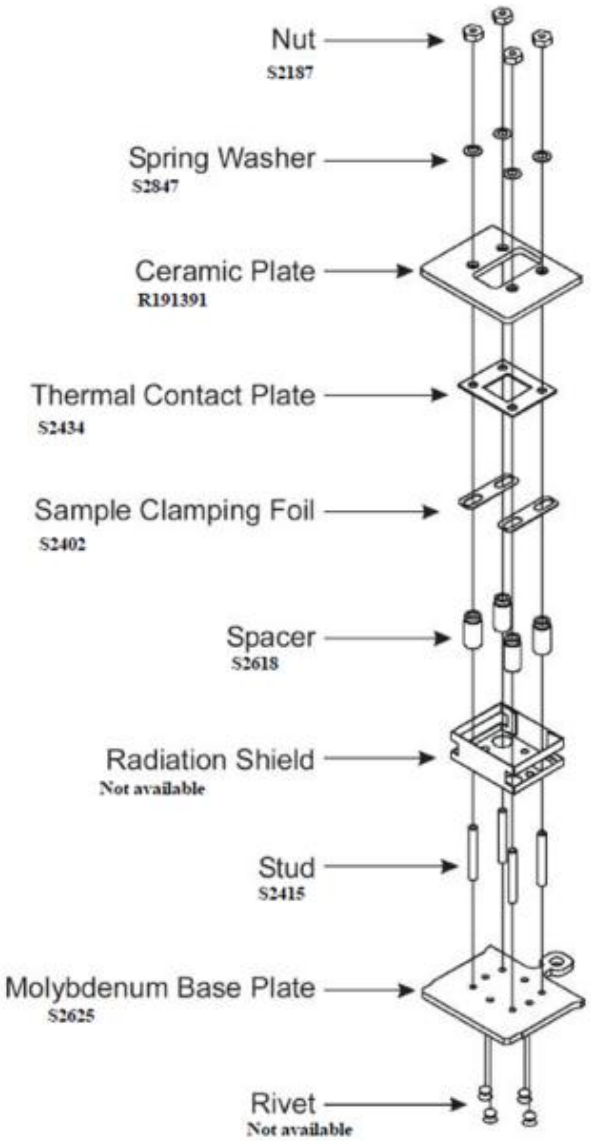

Top Plate:

For spectroscopy applications we recommend metal coated plates (R192031-S).

For prolonged high temperature applications Al_2O_3 plates are recommended (CA02109-S/ CA06702-S = metal coated).

CA02109-S Alumina top plate for VT sample plates

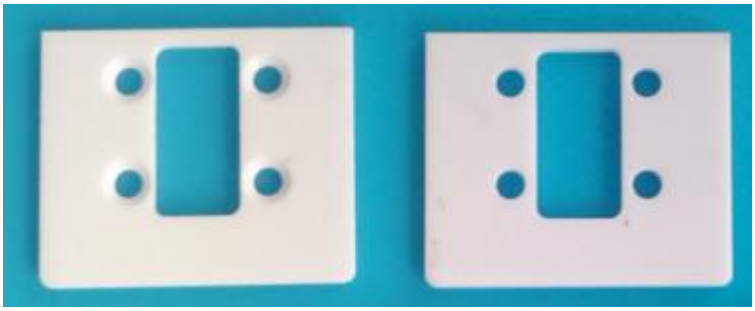

(Back and front side)

The standard ceramic top plates R191391-S (metal coated version: R192031-S) may turn conductive after prolonged exposure to high temperatures particularly in direct current heating sample plates where the sample is heated for many hours

If you run into this effect during your experiment you should try these alumina plates instead. A metal coated version is available for spectroscopy applications to avoid charging effects

Please keep in mind that the drift stability, as well as the highest and lowest achievable temperature inside the VT instrument may be influenced by the different thermal properties of the top plates

CA06702-S Alumina top plate for VT sample plates (metal coated)

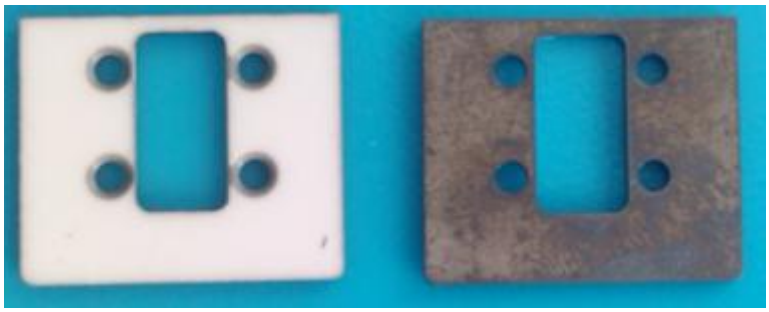

(Back and front side)

Please refer to CA02109-S (above) for details

The metal coating may appear nonuniform after prolonged exposure to air without affecting its effectiveness in avoiding charging effects.

R204245-S E-beam heating sample plate for VT STM and VT AFM

☺ Suitable for VT AFM and VT STM accepting double decker sample plates

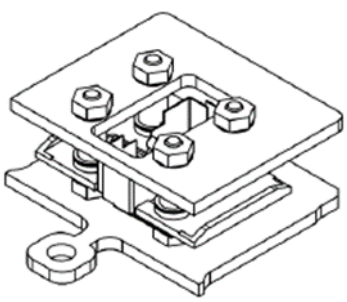

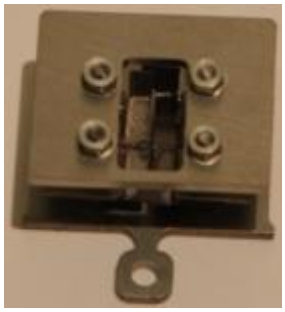

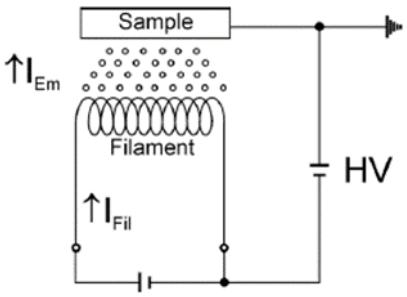

Sample plate with integrated filament for e-beam heating of samples on the system manipulator up to 1800 K for sample preparation. In the VT stage the filament can be used for radiative heating (no high voltage) of the sample up to 650 K during imaging. A dedicated power supply (B002986) is required.

Please note that in order to use this sample plate on a manipulator, the manipulator needs to be equipped with two contact brus

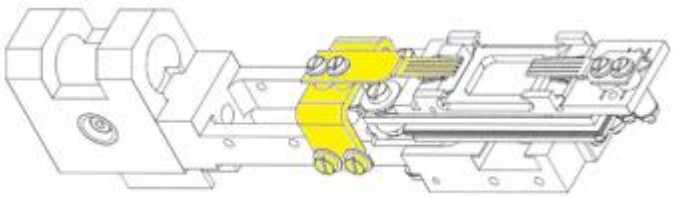

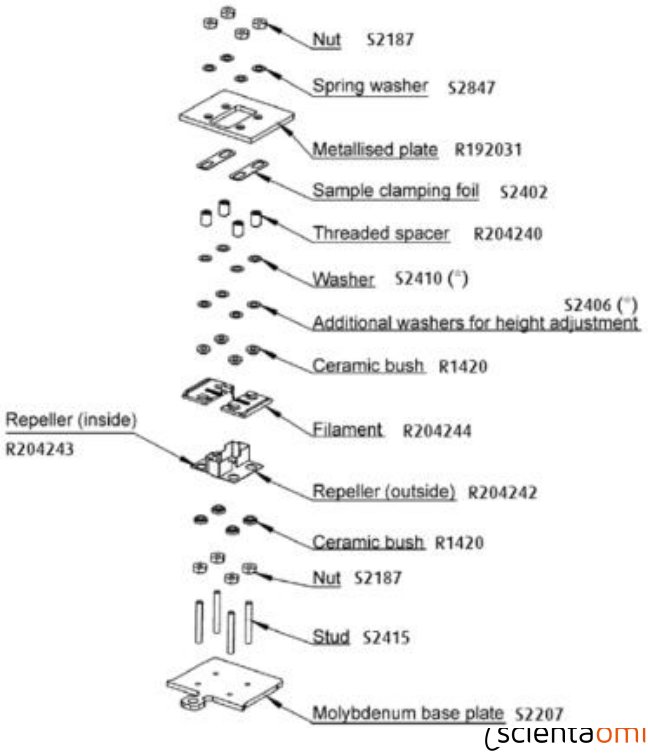

Sample Plates for VT XA Instruments

B002835-S VT XA sample plate for 4 electrical contacts

☺ Suitable for XA-version of VT AFM / STM

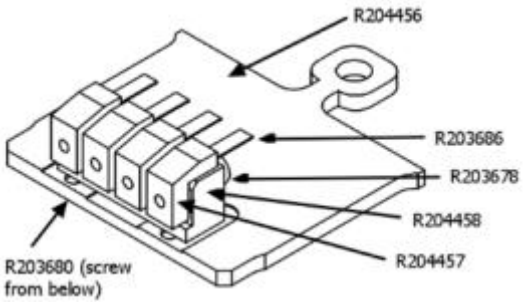

This sample plate is made from molybdenum, tantalum, and a special ceramic, it is possible to heat this sample

CA09778-S Cleaving sample plate for VT XA (special/prototype)

☺ Suitable for XA-version of VT AFM / STM

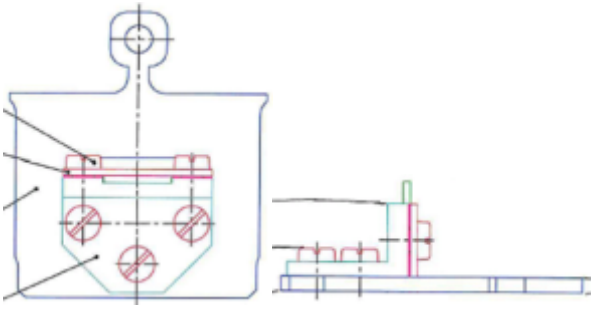

The sample can be about 5 mm wide and 6 mm high

To these 6 mm please add the part of the sample that will be cleaved off

The typical sample thickness is 0.5 mm with the groove holding the sample being 0.4 mm deep

Spare Kit Sets for VT Sample Plates

Some parts are not sold individually, for example:

- For clamping foils S2190 and S2191 please choose the set PN04151-S
- For nuts S2187 please choose the set PN04156-S
- For the base plate S2282 please choose the set PN04169-S
- For the base plate S2207 please choose the set PN04155-S.
- For ceramic bushes R1420 please choose the sets R191413-S or PN04157-S
- For washers S2406, S2408, S2410 and S2484 please choose the set PN04150-S.
- For spring washers S2847 please choose the set PN04154-S.
- For studs S2415 please choose the set PN04153-S.

R191410-S Spares kit type 1

- 4 x S2186 stud, 5 mm long
- 8 x S2187 nut
- 4 x R1420 ceramic bush

PN04169-S Base Plates for DH sample plates (set of 2)

- 2 x S2182 base plate

PN04151-S Set of clamping-foils for DH-sample-plates

- 2 x S2190 Sample clamping foil
- 2 x S2191 Sample clamping foil

PN04156-S Nuts for Omicron-sample-plates

- 20 x S2187 Nuts

PN04157-S Ceramics for Omicron-sample-plates

- 20 x R1420 ceramic bush

PN04147-S Set of accessories for VT-sample-plates:

- 10 x S2406 Washer (t =0.05mm)
- 10 x S2187 Nut
- 10 x R1420 Ceramic bush
- 4 x S2402 Clamping foil
- 4 x S2403 Clamping foil
- 2 x R1421 Contact foil
- 50 x S2847 Spring washer

PN04149-S Set of accessories for VT-RH-sample plates:

- 1 x S2436 PBN heater
- 1 x S2757 Radiation shield
- 2 x S2414 Special stud

PN04150-S Set of washers for VT-sample-plates:

- 8 x S2406 Washer Mo (t =0.05 mm)
- 16 x S2408 Washer Mo (t = 0.5 mm)
- 16 x S2410 Washer Ta (t = 0.1 mm)
- 16 x S2484 Washer Mo (t =0.1 mm)

PN04153-S Studs for VT-sample-plates (set of 8):

- 8 x S2415 Stud (9 mm long)

PN04154-S Spring washers for VT-sample-plates (set of 50):

- 50 x S2847 Spring washer

Sample Plates for LT STM

R209803-S ***Sample Plate for Fast Temperature Variation (FTV) for LT STM***

☺ Suitable for LT-STM

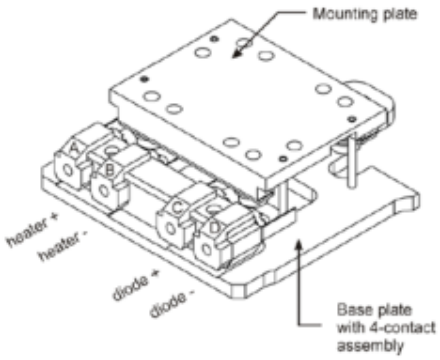



This option allows for atomic resolution measurements from 6K- 400K with fast temperature variation and quick thermal stabilization. The sample is thermally isolated from the microscope stage and locally heated by a compact solid-state heater element mounted close to the sample. A Si diode mounted at the sample plate provides direct temperature measurement. The temperature can be continuously varied from base temperature of up to 300K, using LHe or LN2 as cryogenic liquid with corresponding base temperatures. Please note: for the FTV sample plate, the LT STM must be equipped with the option “4 electrical sample contacts” and a temperature controller are required. The whole sample plate is compatible with temperatures between 3K and 420K. The maximum temperature (150°C) is limited by the maximum temperature of the Si diode.

The sample mounting plate is made from stainless steel and is equipped with 10x M1.2 threads (8 of which with 2 mm depth, 2 of which with 1 mm depth) for easier sample mounting.

Parts for sample clamping:

R213007-S ***Molybdenum stud M1.2 x 2.5 (Minimum order quantity: 5 pieces)***

PN04156-S ***Molybdenum Nuts for Omicron-sample-plates (set of 20)***

S2402-S ***Sample clamping foil small holes, mat. Molybdenum*** 

(Minimum order quantity: 10 pieces)

PN04151-S ***Set of clamping-foils for DH-sample-plates*** 

(Minimum order quantity: 10 pieces)

R204177-S LT STM sample plate with 4 electrical contacts

☺ Suitable for LT-STM

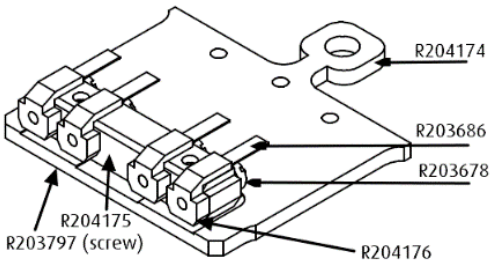

This sample plate is made from molybdenum, tantalum, and a special ceramic, it is possible to heat this sample.

The base plate is equipped with 6x M1.2 threads for attaching samples:

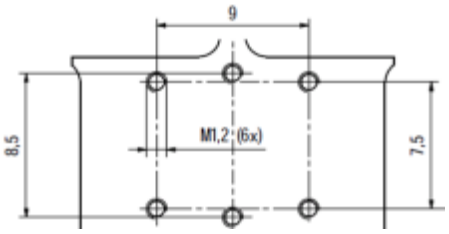

Parts for sample clamping:

R213007-S Molybdenum stud M1.2 x 2.5 (Minimum order quantity: 5 pieces)

PN04156-S Molybdenum Nuts for Omicron-sample-plates (set of 20)

S2402-S Sample clamping foil small holes, mat. Molybdenum 

(Minimum order quantity: 10 pieces)

PN04151-S Set of clamping-foils for DH-sample-plates 

(Minimum order quantity: 10 pieces)

Sample Plates for Fermi SPM

R211296-S ***Sample plate with 4 electrical contacts for Fermi SPM (stainless steel)***

☺ Suitable for Fermi SPM; Fermi Dry Cool SPM

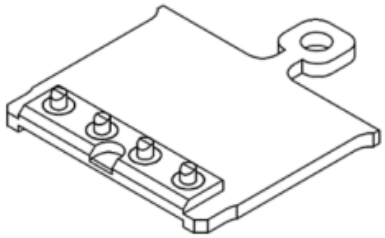

Sample Plates for LT Nanoprobe

R211207-S ***Direct heating sample plate for LT Nanoprobe***

☺ Suitable for LT-Nanoprobe

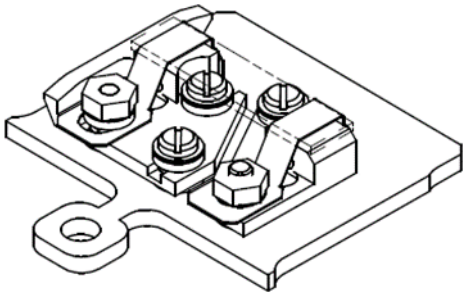

For direct current heating on the manipulator

Height = 4mm

PN07781-S ***Cleaving Sample Plate LT Nanoprobe***

☺ Suitable for LT-Nanoprobe

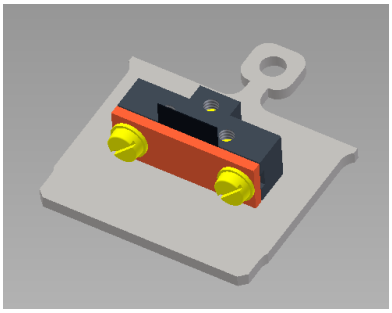

Cleaving Sample Plate LT Nanoprobe, for thin crystals, compatible with 4 Contact option

R211211-S ***Sample plate for LT Nanoprobe (stainless steel)***

☺ Suitable for LT-Nanoprobe

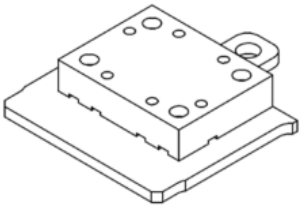

The block has a height of 3 mm and comes with six M1.2 threads for attaching the sample, it is made from stainless steel -> limited heating possible

For better thermal contact the base plate itself is made from molybdenum

Height = 4mm

R211218-S ***Sample plate for LT Nanoprobe (molybdenum)***

☺ Suitable for LT-Nanoprobe

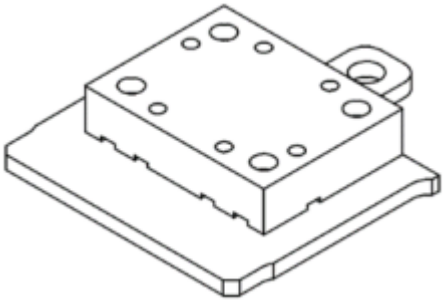

The block has a height of 3 mm and comes with six M1.2 threads for attaching the sample, it is made from molybdenum -> elevated heating possible

Height = 4mm

Parts for sample clamping:

R213007-S ***Molybdenum stud M1.2 x 2.5 (Minimum order quantity: 5 pieces)***

PN04156-S ***Molybdenum Nuts for Omicron-sample-plates (set of 20)***

S2402-S ***Sample clamping foil small holes, mat. Molybdenum*** 

(Minimum order quantity: 10 pieces)

PN04151-S ***Set of clamping-foils for DH-sample-plates*** 

(Minimum order quantity: 10 pieces)

R212730-S ***Sample plate with 4 electrical contacts for LT Nanoprobe (partly molybdenum)***

☺ Suitable for LT-Nanoprobe

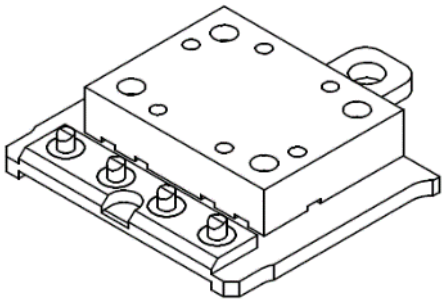

The block has a height of 3 mm and comes with six M1.2 threads for attaching the sample, the block is made from molybdenum, but the base plate and the pins are made from stainless steel -> limited heating possible

Height = 4mm

Parts for sample clamping:

R213007-S ***Molybdenum stud M1.2 x 2.5 (Minimum order quantity: 5 pieces)***

PN04156-S ***Molybdenum Nuts for Omicron-sample-plates (set of 20)***

S2402-S ***Sample clamping foil small holes, mat. Molybdenum*** 

(Minimum order quantity: 10 pieces)

PN04151-S ***Set of clamping-foils for DH-sample-plates*** 

(Minimum order quantity: 10 pieces)

R211524-S ***Sample plate for fast temperature variation (FTV) for LT Nanoprobe***

☺ Suitable for LT-Nanoprobe

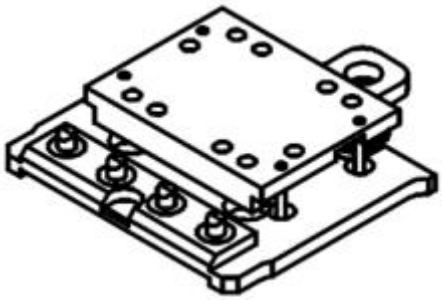

This sample plate allows varying the sample temperature with a small built-in heater. The temperature can be measured with an integrated silicon diode. The base plate and sample mounting plate are made from stainles steel.

Height = 4mm.

Test Samples

S3164-S ***Test sample graphite (HOPG)***

S3165-S ***Test sample mica***

☺ Suitable for practically all of our instruments

😐 Not suitable for Tribus SPM, Cryo STM, Cryo SFM, Cryo SXM



Samples above are approximately 1x1 cm mounted on standard stainless steel sample plates. The picture here shows the HOPG version.

PN07502-S ***Test sample Au on Mica on sample plate for LT/VT SPM (stainless)***

☺ Suitable for practically all of our instruments

😐 Not suitable for TRIBUS SPM, Cryo STM, Cryo SFM, Cryo SXM

Test sample Au on Mica clamped on sample plate for LT/VT (stainless steel). Sample is suitable for sputter and anneal treatment to prepare well ordered Au (111) surface

PN07528 ***Test sample Au on Mica on sample plate for TRIBUS SPM (stainless)***

☺ Suitable for practically all of our instruments

😐 Not suitable for Cryo STM, Cryo SFM, Cryo SXM

Test sample Au on Mica clamped on sample plate for TRIBUS (stainless steel). Sample is suitable for sputter and anneal treatment to prepare well ordered Au (111) surface

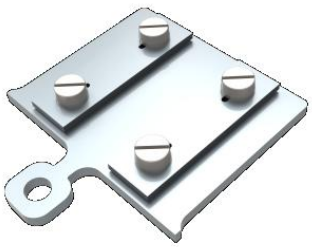

Tools

S249601-S Molybdenum wrench M1.2 for sample mounting

We recommend the use of this molybdenum M1.2 wrench for slackening/tightening the M1.2 molybednum nuts on our sample plates to avoid contamination from stainless steel tools



R193947-S Special tool for threaded spacers on VT sample plates

Useful for the threaded spacer used in some of the double decker VT sample plates



Probes and Probe-Carriers

TRIBUS SPM Head

PN07174-S ***STM tip carrier, Tribus SPM Head (material: non-magnetic) set of 30***

PN07175-S ***STM tip carrier, Tribus SPM Head (material: stainless steel) set of 30***



PN07197-S ***STM tip carrier, etched tungsten tip mounted, Tribus SPM Head (material: non-magnetic) set of 10***

PN07198-S ***STM tip carrier, etched tungsten tip mounted, Tribus SPM Head (material: stainless steel) set of 10***



PN07199-S ***QPlus sensor with etched tungsten tip, Tribus SPM Head (non-magnetic) set of 3***

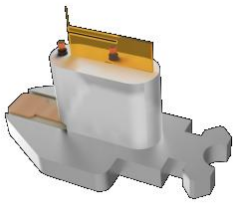

spring constant 1800 N/m, resonance frequency f0 = 33 kHz

QPLUS® is a registered trademark Nr. 77788740 with U.S. Patent and Trademark Office (USPTO).

PN07200-S ***QPlus sensor without tip wire, Tribus SPM Head (non-magnetic), set of 3***

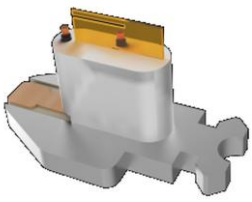

spring constant 1800 N/m, resonance frequency f0 = 33 kHz

QPLUS® is a registered trademark Nr. 77788740 with U.S. Patent and Trademark Office (USPTO).

PN07368-S Transfer Plate for Tip Holder Tribus SPM Head



PN07194-S Tip Exchange Plate, Tribus SPM Head



This tool is necessary for tip exchange in Tribus SPM heads

STM 1, AFM/STM

S202001-S Tip holders for UHV STM1 and UHV AFM/STM (set of 25)

☺ Suitable for STM 1, AFM/STM



S3157-S STM-tips mounted for UHV STM1 and UHV AFM/STM (set of 10)

☺ Suitable for STM 1, AFM/STM

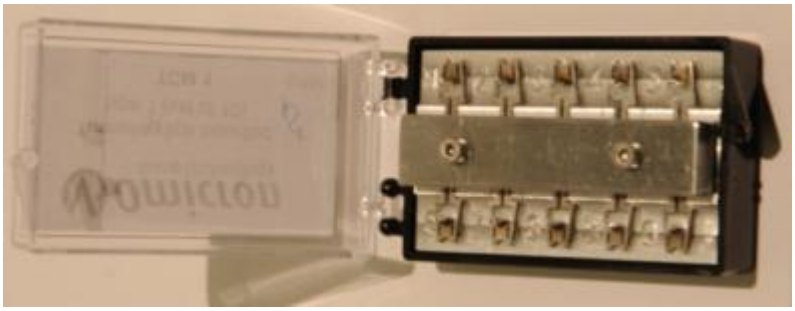

10 tip holders with premounted chemically etched tungsten tips.

S308301-S AFM cantilever carrier 15° (set of 25) for UHV AFM/STM

☺ Suitable for AFM/STM Serial no. >= 23



S3154-S AFM cantilever for contact mode 15° (set of 10), for UHV AFM/STM

☺ Suitable for AFM/STM Serial no. >= 23



S3290-S AFM cantilever for non-contact mode 15° (set of 10), for UHV AFM/STM

☺ Suitable for AFM/STM Serial no. >= 23



S217202-S Tip transfer plate (AFM/STM and STM 1), type 1

☺ Suitable for STM 1, AFM/STM



VT STM, LT STM

S2701-S ***STM tip holders (set of 25) TC2, for VT STM and LT STM (silver tip carriers)***

☺ Suitable for VT STM, LT STM (STM only version)



Inner diameter of tip acceptor: 0.4 mm

S2664-S ***Tunneling tips mounted TCM2 for VT STM and LT STM (set of 10) silver tip carriers***

☺ Suitable for VT STM, LT STM (STM only version)



10 tip holders with premounted chemically etched tungsten tips

R201789-S ***Tip transfer plate for VT STM and LT STM (silver tip carriers)***

☺ Suitable for VT STM, LT STM (STM only version)

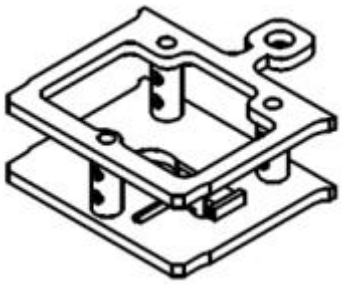

This carrier plate replaces the older versions S286309-S (VT STM only) and R194578-S (LT STM only)

R201869-S Tip transfer plate for VT STM (golden tripod holders)

☺ Suitable for VT STM (STM/SPM version)



diameter of big keyhole 7 mm.

S2832-S STM tip holders TCN S (set of 25) for VT STM and LT STM (golden tripod holders)

☺ Suitable for VT STM, LT STM (Qplus version)

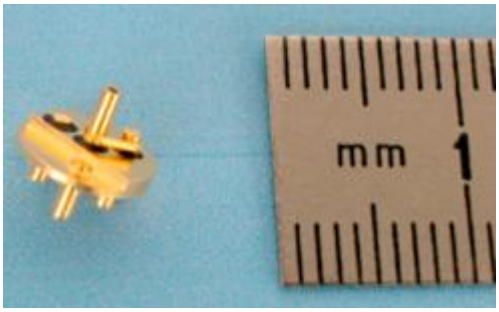

Inner diameter of tip acceptor: 0.5 mm; outer diameter of golden plate 7 mm

S2833-S ***Tunneling tips mounted TCN MS (set of 10) for VT STM and LT STM (golden tripod holders)***

☺ Suitable for VT STM, LT STM (Qplus version)



10 tip holders with premounted chemically etched tungsten tips; outer diameter of golden plate 7 mm.

PN05931-S ***QPLUS® Sensor, 33 kHz, mounted tip for VT- & LT-STM (set of 5)***

☺ Suitable for VT STM, LT STM (AFM QPLUS® version)

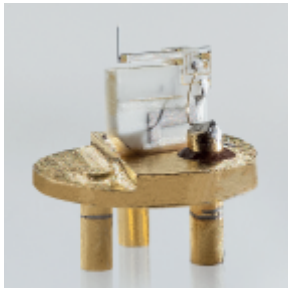

Set of 5 QPLUS® NC-AFM sensors with mounted QPLUS® sensor and tungsten tip. The spring constant is k = 1800 N/m and the resonance frequency f0 = 33 kHz (without a mounted tip). Only compatible with the VT STM and LT STM (AFM QPLUS® version) .

QPLUS® is a registered trademark Nr. 77788740 with U.S. Patent and Trademark Office (USPTO).

PN05010-S ***Carriers for self-assembling QPLUS® sensors (set of 10)***

☺ Suitable for VT STM, LT STM (AFM QPLUS® version)

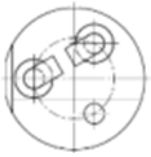

Outer diameter of golden plate 7mm

R210586-S Tip transfer plate for LT STM with QPLUS® AFM

☺ Suitable for LT STM (AFM QPLUS® version)

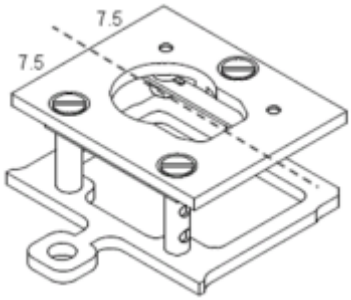

In this version the keyhole is centered on the top plate; diameter of big keyhole 7 mm.

This is the more modern version which was redesigned to simplify tip transfer. It is to be preferred unless a tip preparation tool is present on the system. In that case the same transfer plates as already present in the system must be used to preserve the alignment with the tip preparation tool.

VT AFM

R192945-S Tip holder (set of 25) for VT AFM

☺ Suitable for VT AFM

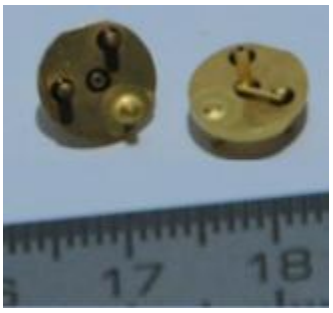

outer diameter of golden plate 9 mm

R192130-S Tunneling tips mounted Typ 4 (set of 10) for VT AFM

☺ Suitable for VT AFM



10 tip holders with premounted chemically etched tungsten tips; OD of golden plate 9mm

R192946-S Cantilever holder (set of 25) for VT AFM

☺ Suitable for VT AFM



diameter of golden plate 9 mm

R194336-S Contact-mode cantilever (set of 10) for VT AFM

☺ Suitable for VT AFM



diameter of golden plate 9 mm

R194337-S Non-contact-mode cantilever (set of 10) for VT AFM

☺ Suitable for VT AFM



diameter of golden plate 9 mm

R206963-S Tip/cantilever transfer plate type 7 for VT AFM

☺ Suitable for VT AFM



Diameter of big keyhole 9 mm, Replaces 201854-S

R191776-S Transport box for tip- and cantilever-holders (VT-AFM)

☺ Suitable for VT AFM



PN05930-S QPLUS® Sensor, 33 kHz, mounted tip for VT AFM (set of 5)

☺ Suitable for VT AFM (AFM QPLUS® version)

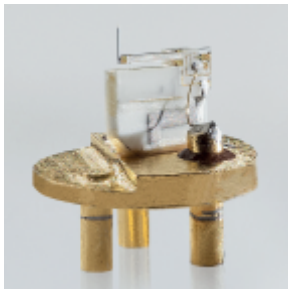

Set of 5 QPLUS® NC-AFM sensors with mounted QPLUS® sensor and tungsten tip. The sensor features a separate tip electrode for combined STM/NC-AFM operation. The spring constant is k = 1800 N/m and the resonance frequency f0 = 33 kHz (without a mounted tip). Only compatible with the VT AFM.

QPLUS® is a registered trademark Nr. 77788740 with U.S. Patent and Trademark Office (USPTO).

Fermi SPM

PN05134-S Tip holder for Fermi SPM (set of 25)

☺ Suitable for Fermi SPM; Fermi Dry Cool SPM

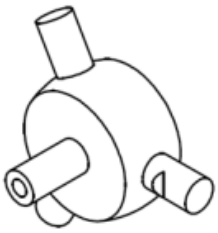

The leg marked with a notch is connected to the tip

CA12539-S Tunneling tips, mounted, for Fermi SPM (set of 5)

☺ Suitable for Fermi SPM; Fermi Dry Cool SPM



5 tip holders with pre-mounted chemically etched tungsten tip.

R216115-S Tip transfer plate for Fermi SPM

☺ Suitable for Fermi SPM; Fermi Dry Cool SPM

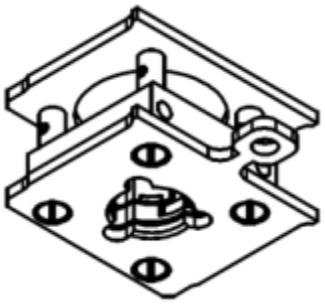

PN05932-S QPLUS® Sensor, 33 kHz, mounted tip for Fermi (SPM & DryCoolTM SPM) (set of 5)

☺ Suitable for Fermi SPM; Fermi Dry Cool SPM



Set of 5 QPLUS® NC-AFM sensors with mounted QPLUS® sensor and tungsten tip. The spring constant is k = 1800 N/m and the resonance frequency f0 = 33 kHz (without a mounted tip). Only compatible with the Fermi SPM.

QPLUS® is a registered trademark Nr. 77788740 with U.S. Patent and Trademark Office (USPTO)

LT Nanoprobe

PN04352-S Tip holders for LT Nanoprobe (set of 25)

☺ Suitable for LT-Nanoprobe

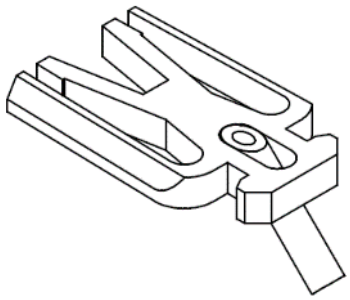

PN04746-S Tunneling tips, mounted, for LT Nanoprobe (set of 10)

☺ Suitable for LT-Nanoprobe

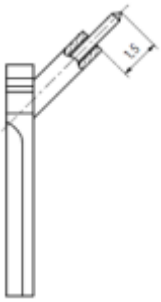

10 tip holders with premounted chemically etched tungsten tips.

R206457-S Tip transfer plate for LT Nanoprobe

☺ Suitable for LT-Nanoprobe

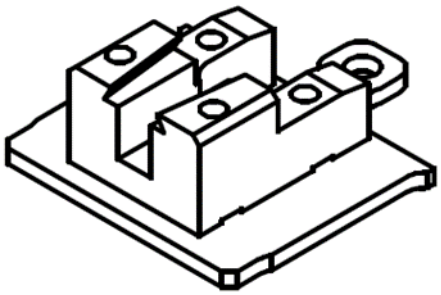

PN05933-S QPLUS® Sensor, 33 kHz, mounted tip for LT Nanoprobe (set of 5)

☺ Suitable for LT-Nanoprobe



Set of 5 QPLUS® NC-AFM sensors with mounted QPLUS® sensor and tungsten tip. The spring constant is k = 1800 N/m and the resonance frequency f0 = 33 kHz (without a mounted tip). Only compatible with the LT NANOPROBE.

QPLUS® is a registered trademark Nr. 77788740 with U.S. Patent and Trademark Office (USPTO).

Tesla JT SPM

PN06747-S QPLUS® Sensor, 33 kHz, mounted tip for Tesla JT SPM (set of 5)

☺ Suitable for Tesla JT SPM

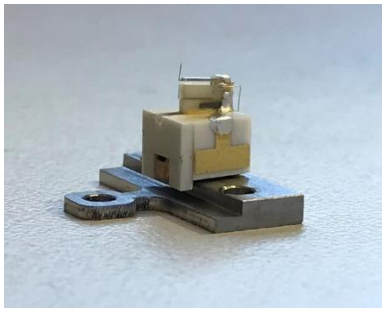

Set of 5 QPLUS® NC-AFM sensors with mounted QPLUS® sensor and tungsten tip. The spring constant is k = 1800 N/m and the resonance frequency f0 = 33 kHz (without a mounted tip). Only compatible with the TESLA JT.

QPLUS® is a registered trademark Nr. 77788740 with U.S. Patent and Trademark Office (USPTO).

QPLUS® Sensors

CA14555-S QPLUS® sensors 33kHz (10 off), tuning fork only, no holder

k = 1800 N/m, f0 = 33 kHz, separate tip electrode for combined STM/AFM operation.

*QPLUS® is a registered trademark Nr. 77788740 with U.S. Patent and Trademark Office (USPTO).

PN05632-S QPLUS®* sensors L0.8, 52 kHz, (10 off), tuning fork only, no holder

k = 3500 N/m, f0 = 52 kHz, separate tip electrode for combined STM/AFM operation.

*QPLUS® is a registered trademark Nr. 77788740 with U.S. Patent and Trademark Office (USPTO).

